ARGO
6 & 8 Wheel

ATV
PARTS MANUAL

MODELS - T, TB, HT, HTB from 1977
- KB from 1981 - 1986
- K from 1983
- S from 1986
- SB from 1987

MANUAL NO. 670-09

TABLE OF CONTENTS

Order of Introduction **Page**

A. Purpose of the Parts Manual i
B. How to Identify and Explanation of Serial Numbers i
C. Abbreviations ii
D. Explanation of the Format ii
E. How to Use the Parts Manual ii
F. How to Order Parts ii

Index

Group Number	Group Name	Illustration Page Number	Parts Description Page Number
1.0	Transmission	1	1,2
2.0	Power Pack — Tecumseh..	3	4
3.0	Power Pack — Kohler-8-I/C	5	6
4.0	Power Pack — Kohler-6-IIC..	7	8
5.0	Power Pack — B.& S.-6-TWIN	9	10
6.0	Ducting & Exhaust — Tecumseh..	11	11
6.1	Ducting & Exhaust — Tecumseh CB ..	12	12
7.0	Ducting & Exhaust — Kohler I/C	13	13
8.0	Ducting & Exhaust — B.& S. TWIN.. ..	14	14
9.0	Clutches — Salsbury 780 — (Tec.)	15	15
10.0	Clutches — Salsbury 1190 — (Kohler) .	16	16
11.0	Clutches — Power Bloc	17	17
12.0	Hydraulic Brake — Cooling System ...	18	18
13.0	Brakes — Mechanical	19	19
14.0	Brakes — Hydraulic..	20	20
15.0	Firewall.	21	21
16.0	Fuel System & Seat Ass'y	22	22
17.0	Vehicle Bodies	23,24,25	25,26
18.0	Frames	27	28
19.0	Chain Take-up	29	29
20.0	Electrical	30,31	31

PARTS MANUAL INTRODUCTION

A PURPOSE OF THE PARTS MANUAL

This manual has been prepared to better acquaint the dealer and mechanic with Argo All Terrain Vehicle parts and identification. It lists only parts and accessories available as spare parts.

B HOW TO IDENTIFY AND EXPLANATION OF SERIAL NUMBERS

The vehicle serial number is stamped on a small aluminum plate fastened to the dash or firewall.

Vehicles are identified by a four digit number preceded by either of the following prefixes.

T — TECUMSEH 6 Wheel Vehicle. (Standard)
HT — TECUMSEH 6 Wheel Vehicle, (Heavy Duty)
TB — TECUMSEH 8 Wheel Vehicle. (Standard)
HTB — TECUMSEH 8 Wheel Vehicle, (Heavy Duty)

K — KOHLER 6 Wheel Vehicle. (I/C)
KB — KOHLER 8 Wheel Vehicle, (I/C)
S — BRIGGS & STRATTON 6 Wheel Vehicle. (TWIN)
SB — BRIGGS & STRATTON 8 Wheel Vehicle. (TWIN)

Note: All KB serial numbers after KB3972 inclusive are I/C (Industrial/Commercial) versions.

This manual identifies only those parts and vehicles built after March 1977. Refer to 670 Parts Manual for previous models.

Transmission serial numbers may be found stamped on top of the transmission. Each transmission is identified by a four digit number followed by one or more letters indicating the gearing variation. Please note parts according to the transmission chart within this manual.

C ABBREVIATIONS

Remarks Column:

AA	—	Available in an assembly only	NA	—	Not available
AC	—	Available as component only	RO	—	Replaces others
AS	—	Available in a set only	RR	—	Recommended as replacement

Description Column:

Alum	—	Aluminum	lg	—	Long
Approx	—	Approximately	mm	—	Millimeter
ASS'Y	—	Assembly	No.	—	Number
B & S	—	Briggs & Stratton Twin (engine type)	Nos.	—	Numbers
BRKT	—	Bracket	#	—	Number
c/w	—	Complete with	OC	—	Outside Circumference
CYL	—	Cylinder	OD	—	Outside Diameter
dia	—	Diameter	P	—	Pitch
EX	—	Exhaust	PN	—	Pan (screw head type)
ga	—	Gauge	RC	—	Roller Chain
HC	—	High Collar	RH	—	Right Hand
HD	—	Head	S	—	Sprocket
HHCS	—	Hex Head Cap Screw	SHCS	—	Socket Head Cap Screw
Hydrl	—	Hydraulic	SLT	—	Slot
I/C	—	Industrial Commercial	spd	—	Speed
ID	—	Inside Diameter	T	—	Teeth
Incl	—	Includes	TEC	—	Tecumseh (engine type)
KOH	—	Kohler (engine type)	trans	—	Transmission
LH	—	Left Hand	WHL	—	Wheel

D EXPLANATION OF THE FORMAT

Key No.	—	Key Number — for reference between Part Illustration and Part Description only.
Part No.	—	Part Number — Argo part number for identification and ordering
Remarks	—	Abbreviations are used here to aid in the selection of the correct part.
Description	—	Part Name written in capital letters for identification and recording. IMPORTANT: Beneath the Description, other details may be indicated, including the serial number of the vehicles this part is restricted to. Please check this so that you order the correct part.
Quantity	—	Indicates the quantity of parts used in that Group Assembly.. This may be indicated under 6.8 or I/C columns in some Groups.

E HOW TO USE THE PARTS MANUAL

Refer to the Manuals Index and find the major assembly you desire identified by Group number and name. Turn to the illustration page indicated.

- On the Illustration page, identify the part you require by key number. Note the Key number, the Group name and Group number.
- Refer to the accompanying Parts List Page having the same Group name and number.
- Finally, locate the part number on the Parts List page vertically by finding the Key number.

  NOTE: THERE ARE USUALLY TWO COLUMNS OF PARTS ON A PARTS LIST PAGE.
- You then have the part number, description and quantity of the part found in that Group Assembly.

Important: Sometimes more than one similar key number may appear in a Group Illustration or Parts List. In such a case, that part is used in more than one location or subassembly in that Group and is noted with a suffix letter, (a,b,c,...) to facilitate the ordering of the correct quantity.

A key number with or without a number suffix and found more than once in a Group Parts List will have different part numbers and/or description with accompanying serial number restrictions. Please note these for correct part identification.

When no Serial number details appear along with a Part description or the quantity is not listed under 6, 8, or I/C models, or none of the above variations appear, then that part fits all models under the Group name.

(It is important to note the serial number restriction found under Description to locate the correct part for a particular vehicle as the year of manufacture is not always known and design modifications are performed continuously.)

F HOW TO ORDER PARTS

To ensure that you receive the correct part which you require, please indicate the quantity, Argo Part Number and Part Name in your order. DO NOT order by Key Number or Page Number.

This manual is based on the latest product information available at the time of printing. Ontario Drive and Gear Limited reserves the right to make changes at any time and without obligation.

Reproduction of any part of this publication is prohibited without prior written permission.

© Ontario Drive and Gear Limited 1986

1.0 Transmission (All Models)

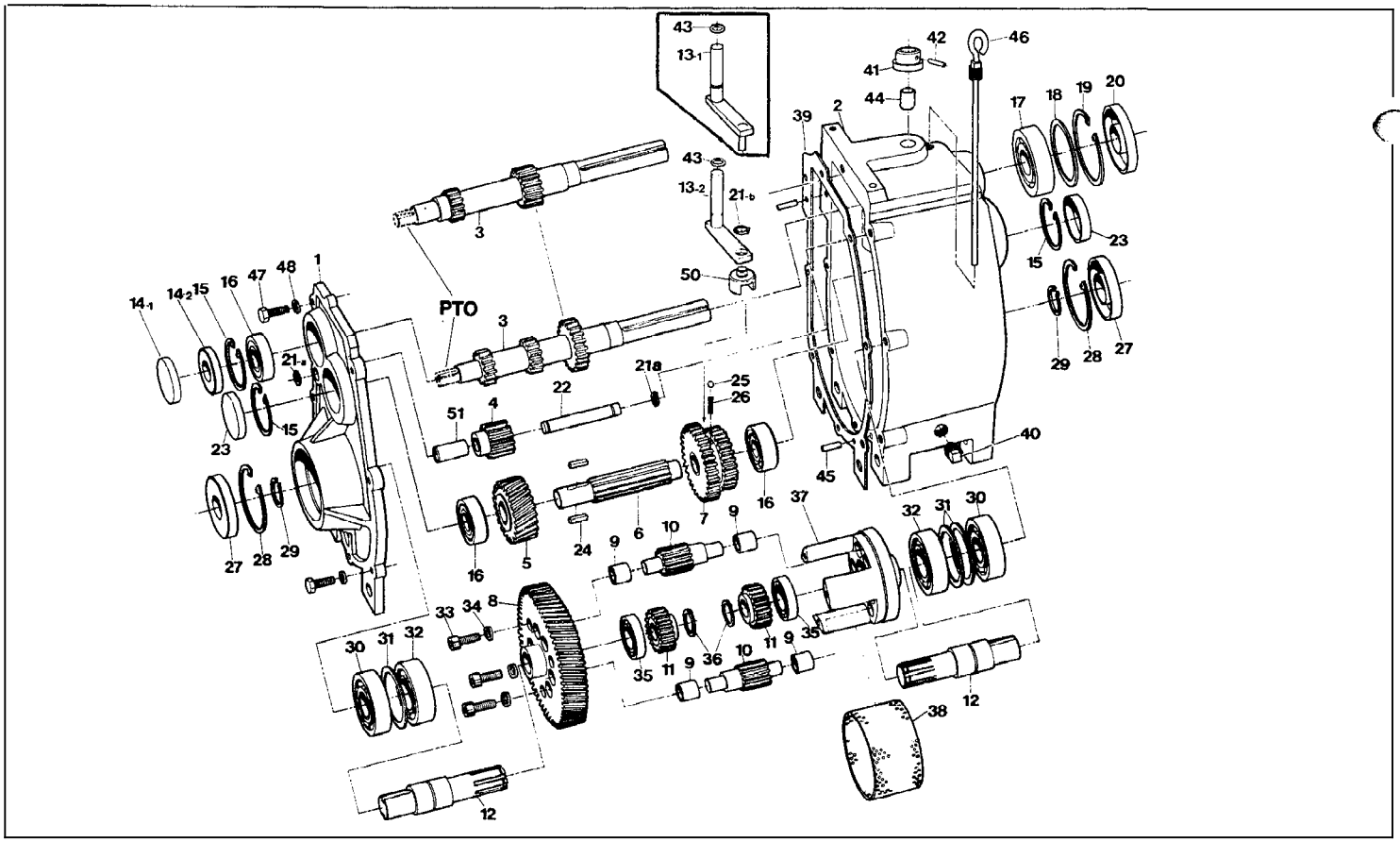

1.0 Transmission

Key No.	Part No.	Remarks	Description	Qty.
1	3402		TRANSMISSION SIDE COVER, alum	1
1	34.49		TRANSMISSION SIDE COVER, alum	1
1	34-56		TRANSMISSION SIDE COVER, to trans. #11349; use with part #34-57 or #34-61 Housing only. If not available, replace cover & housing with part #34-66 Cover & #34-67 Housing.	1
1	34-66		TRANSMISSION SIDE COVER, from trans. #11350; use with part #34-67 Housing; has bosses for hydr. caliper mounting from trans #12336 on.	1
2	34-01		TRANSMISSION HOUSING, alum.	1
2	34-48		TRANSMISSION HOUSING, alum.	1
2	34-57		TRANSMISSION HOUSING, to trans. #9687; use with part #34-56 Cover only. If not available, replace housing & cover with part #34-67 Housing & #34-66 Cover.	1
2	34-61		TRANSMISSION, HOUSING, from trans. #9688 to #11349; use with part #34-56 Cover only. If not available, replace housing and cover with part #34-67 Housing & #34-66 Cover.	1
2	34-67		TRANSMISSION HOUSING, from trans. #11350; use with part #34-66 Cover; has bosses for hydr. caliper mounting from trans. #12336 on	1
3	3403		INPUT SHAFT, 15/22 T-, dbl. spd - short, spur	1
3	34-35		INPUT SHAFT. 15/17 T-, single spd - short, spur	1
3	34-39		INPUT SHAFT, 14/21 T-. dbl. spd - short, spur	1
3	34-50	NA	INPUT SHAFT (discontinued. use part No. 34-80 if not available)	1
3	34-80	RO	INPUT SHAFT, 14/21T, dbl spd-spur; no PTO on shaft: requires No. 14-1 Plug Plate.	1
3	34-27	NA	INPUT SHAFT (discontinued - use part No. 34-87 if not available)	1
3	3487	RO	INPUT SHAFT. 14/17 T, single spd. - spur; no PTO on shaft; requires key No. 141 Plug Plate	1
3	34-17	NA	INPUT SHAFT (discontinued - use part No. 34-21 if not available)	1
3	3421	RO	INPUT SHAFT, 13/21 T, dbl. spd. - spur; no PTO on shaft, requires key No. 14-1 Plug Plate	1
4	3407-A		REVERSE IDLER, 17 T-. spur Incl. bushing 51	1
4	34-38-A		REVERSE IDLER, 16 T-, spur Incl. bushing 51	1
4	34-16-A		REVERSE IDLER, 13 T-, spur Incl. bushing 51	1
5	34-24		GEAR, 34 T-, spur	1
5	34-40		GEAR, 26 T-. helical	1

Key No.	Part No.	Remarks	Description	Qty.
5	34-44		GEAR, 21 T-, helical	1
6	34-04		SPLINE SHAFT, double speed	1
6	3437		SPLINE SHAFT, single speed	1
7	34-06		DOUBLE GEAR, 45/38 T-. spur	1
7	34-26		DOUBLE GEAR. 43/40 T-, spur	1
7	34-36		DOUBLE GEAR, 45/40 T-, spur	1
7	34-41		DOUBLE GEAR, 43/36 T-, spur	1
7	34-18		DOUBLE GEAR, 33/26 T-, spur	1
8	34-25		GEAR PLATE, 68 T-. spur	1
8	34-43		GEAR PLATE, 71 T-. helical	1
8	34-45		GEAR PLATE. 76 T-, helical	1
9		NA	BEARING, needle 3/4" lg, use part NO. 105-03 below	12
9	105-03		BEARING, Oilite bushin ,3/4" lg; from Transmission No. 9128	12
10	34-12		PLANET GEAR, (Pinion), 12 T-, OD 1.142	6
10	34-13		PLANET GEAR, (Pinion). 12T-, OD 1.130", stub	6
11	34-29		SUN GEAR, (Differentia;). 21 T-, OD 1.890"	2
11	34-14		SUN GEAR, (Differential), 21 T-, OD 1.880", stub	2
12	34-28X		OUTPUT SHAFT, short, (single sprkt)	2
12	34-28		OUTPUT SHAFT, short, (single sprkt)	2
12	3442		OUTPUT SHAFT, long, (dbl. sprkt)	2
13-1	34-34		SHIFTING ASS'Y, pin, .750" LG	1
13-1	34-52		SHIFTING ASS'Y, pin, .668" LG	1
13-1		NA	SHIFTING ASS'Y, pin, .893" lg; use key No. 13-2	1
13-2	3465		SHIFTING SUB-ASS'Y, use with key No. 50; production from Trans. No. 10431 but can be used on all "C" series transmissions	1
14-1	3107		PLUG PLATE, 18 GA. steel	1
14-2	102-06		OIL SEAL, 20 x 47 x 7 mm, use from Trans. Serial No. 3557-SS to 11327	1
15	10601		RETAINING RING, 2.054" OD, NAM 1300185	3
16	101-01		BEARING, 62042	3
17	101-16		BEARING, 6206	1
18	114-02		SHIM WASHER. 2-1/16 ID, 2-27/64 OD, 25 ga	1
19	106-05		RETAINING RING, 2.702" OD, NAM 1300244	1
20	102-05		OIL SEAL, 30 x 62 x 10 mm	1

Ref. No.	1 TRANSMISSION SERIES	2 TRANSMISSION SIDE COVER	3 TRANSMISSION HOUSING	4 INPUT SHAFT	5 REVERSE IDLER	6 GEAR	7 SPLINE SHAFT	8 DOUBLE GEAR	9 GEAR PLATE	10 BEARING	11 PLANET GEAR (PINION)	12 SUN GEAR (DIFF. GEAR)	13 OUTPUT SHAFT	51 SHIFTING ASS'Y BEARING
X	34.02	34.01	34.03	34.07	34.24	34.04	34.06	34.25	105.03	34.12	34.29	34.28X	34.34	105.05
E	34.02	34.01	34.35	34.07	34.24	34.37	34.36	34.25	105.03	34.12	34.29	34.28	34.34	105.05
N	34.02	34.01	34.39	34.38	34.40	34.04	34.41	34.43	105.03	34.12	34.29	34.42	34.34	105.05
NO	34.02	34.01	34.39	34.38	34.40	34.04	34.41	34.43	105.05	34.12	34.29	34.42	34.34	105.05
F	34.02	34.01	34.39	34.38	34.44	34.04	34.41	34.45	105.05	34.12	34.29	34.42	34.34	105.05
SS	34.02 34.49	34.01 34.48	34.39 34.50	34.38	34.24	34.04	34.41	34.25	105.05	34.12	34.29	34.42	34.34	105.05
G	34.49	34.48	34.50 34.80	34.38	34.44	34.04	34.41	34.45	105.03	34.12	34.29	34.42	34.52	105.05
GSS	34.49	34.48	34.50 34.80	34.38	34.24	34.04	34.41	34.25	105.03	34.12	34.29	34.42	34.52	105.05
GT	34.49	34.48	34.50 34.80	34.38	34.44	34.04	34.41	34.45	105.03	34.13	34.14	34.42	34.52	105.05
GTSS	34.49	34.48	34.50 34.80	34.38	34.24	34.04	34.41	34.25	105.03	34.13	34.14	34.42	34.52	105.05
H	34.49	34.48	34.50 34.80	34.38	34.40	34.04	34.41	34.43	105.03	34.12	34.29	34.42	34.52	105.05
J	34.49	34.48	34.27 34.87	34.38	34.44	34.37	34.26	34.45	105.03	34.12	34.29	34.42	34.52	105.05
JH	34.49	34.48	34.27 34.87	34.38	34.40	34.37	34.26	34.43	105.03	34.12	34.29	34.42	34.52	105.05
JSS	34.49	34.48	34.27 34.87	34.38	34.24	34.37	34.26	34.25	105.03	34.12	34.29	34.42	34.52	105.05
JT	34.49	34.48	34.27 34.87	34.38	34.44	34.37	34.26	34.45	105.03	34.13	34.14	34.42	34.52	105.05
JTH	34.49	34.48	34.27 34.87	34.38	34.40	34.37	34.26	34.43	105.03	34.13	34.14	34.42	34.52	105.05
JTSS	34.49	34.48	34.27 34.87	34.38	34.24	34.37	34.26	34.25	105.03	34.13	34.14	34.42	34.52	105.05
CG	34.56 34.66	34.57 34.67	34.17 34.21	34.16	34.44	34.04	34.18	34.45	105.03	34.13	34.14	34.42	34.65	105.05
CH	34.56 34.66	34.57 34.67	34.17 34.21	34.16	34.40	34.04	34.18	34.43	105.03	34.13	34.14	34.42	34.65	105.05
CSS	34.56 34.66	34.57 34.67	34.17 34.21	34.16	34.24	34.04	34.10	34.25	105.03	34.13	34.14	34.42	34.65	105.05
CGK	34.56 34.66	34.61 34.67	34.17 34.21	34.16	34.44	34.04	34.18	34.45	105.03	34.13	34.14	34.42	34.65	105.05
CHK	34.56 34.66	34.61 34.67	34.17 34.21	34.16	34.40	34.04	34.18	34.43	105.03	34.13	34.14	34.42	34.65	105.05

1.0 Transmission

Key No	Part No.	Remark	Description	Qty.
21a	10745		RETAINING RING, .461" ID. AM140050	2
21b	107-05		RETAINING RING, .461" ID. AM140050	1
22	34-11		DOWEL PIN, 1/2 Dia. x 3-1/2 LG	1
23	3147		PLUG PLATE, 18 ga. steel	2
24	110-02		KEY, 3/16 x 3/16 x 7/8"	2
25	109-03		CARBON STEEL BALL, 7/32'	1
26	34-32		SPRING 7/32 DIA x .500 LG	1
27	102-03		OIL SEAL, 30 x 72 x 10 mm	2
28	106-03		RETAINING RING, 3 121 OD, NAM1300281	2
29	10742		RETAINING RING. 1.098 ID. AM1400118	2
30	101-04		BEARING. 6306	2
31	11441		SHIM WASHER 2.25" ID x 2.81 OD x .020 THK. as required	3
32	101-03		BEARING. 6207	2
33	10344		SHCS, 5116.18 x 1	3
34	108-02		H C. LOCKWASHER. 5/16"	3
35	101-15		BEARING. 6W5	2
36	107-04		RETAINING RING, .910 ID, AM140098	2
37	34-08		CAGE, Aluminum	1

Key No	Part No	Remark	Description	Qty
38	34-20		CAGE SCREEN, used on Transmission No. 5635 . 7535 only.	1
39	34-47		COVER GASKET, .015" THK	1
40	103-02		MAGNETIC PLUG, sq. hd. 3/8 - 18 NPT. from Transmission No. 7716	1
41	34-33		SHIFTING CAP	1
42	111-01		SPIROL PIN, 5/32 x 1	1
43	11301		O-RING, #12, .070 THK. .364 ID	1
44	10502		OILITE BUSHING. AA628	1
45	10443		DOWEL PIN, 1/4 x 3/4" LG	2
46	34-31		Dipstick	1
47	103-06		HHCS 5/16 - 18 x 1"	8
48	108-05		LOCKWASHER. 5/16	8
50	34-63		SHIFT YOKE, use with key No. 13-2	1
51		NA	BEARING. needle, to Trans. No. 9119, use part No. 105-05 below	2
51		NA	BEARING. Oilite, 3/4" lg., from Trans. No. 9120 to 10058, use part No. 10545 below	2
51	10505	RO	BEARING. Oilite, 1-1/2" lg.. replaces others. see also key No. 4	1

2.0 Power Pack – Tecumseh (T,TB,HT,HTB Models)

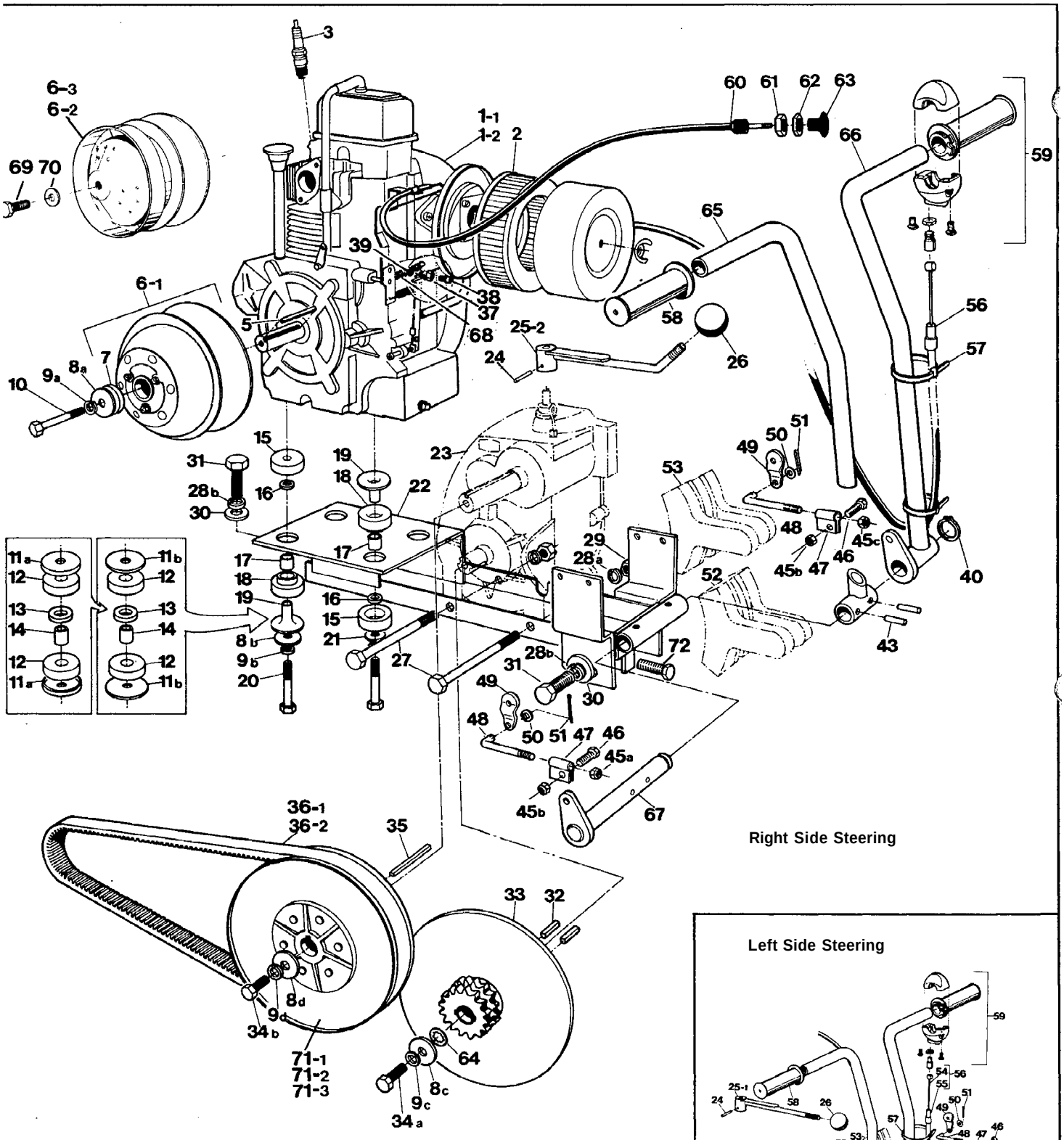

2.0 Power Pack — Tecumseh (T,TB, HT, HTB Models)

Key No	Part No.	Remarks	Description	Qty.
1-1	125-28		TECUMSEH ENGINE, 16 hp. std., Incl key No.s 2 & 3; to T-5472, TB-6544, HT-5289, HTB-6632	1
1-2	126.06		TECUMSEH ENGINE. 16 hp. Counter-Balanced; threaded shaft: Incl. key No.s 2 & 3: from T-5498, TB-6817, HTB-6736	1
2	125-27		AIR FILTER ELEMENT	1
3	100-34		SPARK PLUG, L-85	1
5	110-07	RO	KEY. 3/16 x 1/4 x 2 1/2"; used with Nos. 1-1 & 6-1; to T-5472, TB-6544, HT-5289. HTB-6632	1
6-1	125-22		DRIVER CLUTCH. Salsbury 780. keyed bore Incl No. 7, used with 1-1, 361, 71-1; to T-5472 TB-6544, HT.5289. HTB-6632; see group (9.0 Clutches — Salsbury 780)	1
6-2	125-79		DRIVER CLUTCH, Power Bloc, threaded bore. Incl Nos. 69 & 70 used with 1-2, 36-2, 71-2; T-5498 to T-5868, TB-6817 to TB-7236, HTB-6736 to HTB-7339; see group (11.0 Clutches P. B.)	1
6-3	126-23		DRIVER CLUTCH, Power Bloc, threaded bore, Incl Nos. 69 & 70; used with 1-2, 36-2, 71-3; from T-5872, TB-7448, HTB-7447; see group (11.0 Clutches — Power Bloc)	1
7	703077		WASHER, retaining	1
8a	108-18		SPEC. WASHER, 13/32 x 1 ⅜ x 11ga.	1
8b	108-18		SPEC. WASHER, 13/32 x 1⅜ x 11 ga from T-4671, HT-4687, TB-4420, HTB-4444	2
8c	108-18		SPEC. WASHER, 13/32x 1⅜ x 11ga	2
8d	108-18		SPEC. WASHER, 13/32 x 1⅜ x 11ga	1
8e	108-18		SPEC. WASHER, 13/32x 1⅜ x 11ga	2
9a	108-06		LOCKWASHER. ⅜"	1
9b	108-06		LOCKWASHER, Ye"	4
9c	108-06		LOCKWASHER. ⅜"	2
9d	108-06		LOCKWASHER, ⅜"	1
9e	108-06		LOCKWASHER, ⅜"	2
10	10919		HHCS, ⅜ - 24 x 2½"	1
11a	202-22		FLANGED WASHER, to T-4559, TB-4021, HT-4585, HTB-4046. Use 11b if not available	a
11b	108-20		FLATWASHER, ⅜ x 2⅝ x 11ga. from T-4585 to T-4670. TB-4047 to TB-4190 from HT-4590 to HT-4686, HTB-4052 to HTB-4443	8
12	202-20	RO	RUBBER MOUNT, ½ x 2" OD to T-4670, TB-4190, HT-4686, HTB-4443	8
13	202-24		RUBBER WASHER, ¼ x ⅜ x 1" OD to T-4670, TB-4190, HT-4686, HTB-4443	4
14	61036		MOTOR MOUNT BUSHING, 9/16 x 1⅛" to T-4670, TB-4190, HT-4686, HTB-4443	4
15	125-67		REBOUND MOUNT, Incl 16, from T-4671, TB-4420, HT-4687, HTB-4444	4
16		AA	WASHER SPECIAL, .12 THK x .95 DIA, part of 15	1
17	12570		RUBBER BUSHING, from T-4671, TB-4420 HT-4687, HTB-4444	4
18	125-66		LOAD MOUNT, from T-4671, TB-4420, HT-4687, HTB-4444	4
19	125-69		STEEL TUBE SPACER, from T-4671, TB-4420 HT-4687, HTB-4444	4
20	103-79		HHCS, ⅜ - 16 x 2⅝"	4
21	108-15		SAE - WASHER, ⅜"	2
22-1	611-16	NA	POWER PACK FRAME-TEC, (Left Side Steer) uses 11a or b. 12 - 14; to T-4670, TB-4190, HT-4686, HTB-4443, use 22-2 if NA	1
22-2	611-56		POWER PACK FRAME. TEC, (Left Side Steer) uses 8b, 15-19 from T-4671 to T-5117, TB-4420 to TB-5471, HT-4687 to HT-5066, HTB-4444 to HTB-5664	1
22-3	611-58		POWER PACK FRAME - TEC, (Right Side Steer); used with key No.s 1-1, 8b and 15 to 19 from T-5117 to T-5472, TB-5690 to TB-6544, Hi-5289, HTB-5665 to HTB-6632	1
22-4	611-65		POWER PACK FRAME - TEC, (Right Side Steer): used with key No.s 1-2, 8b and 15 to 19; from T-5498 TB-6817 HTB-6636	1
23	610-17		TRANSMISSION, see group (1.0 Transmission) for series numbers and components	1
24	111.01		SPIROL PIN, 5/32 x 1	1
25-1	610-08		SHIFT LEVER ASS'Y, to T-5091, TB-5471 HT-5066, HTB-5664	1
25-2	610-66		SHIFT LEVER ASS'Y. from T-5117, HTB-5665	1
26	601-12		BALL KNOB, Plastic	1
27	103-20		BHCS, ½ - 13 x 6½"	2
28a	108-07		LOCKWASHER, ½"	2
28b	108-07		LOCKWASHER ½"	3
	117-06		HEX NUT, ½ - 13	2
	108-09		FLATWASHER, ½ x 1⅜"	3
	103-21		BHCS, ½ - 20 x 1½"	3
	110-08		KEY, ¼ x ¼ x 1¼"	4

Key No	Part No.	Remark	Description	Qty
33	610-24		BRAKE DISC, 40.2 x 15T	2
34a	103-17		HHCS, ⅜ - 16 x 1"	2
34b	103-17		HHCS, ⅜ - 16 x 1"	1
34c	103-17		HHCS, ⅜ - 16 x 1"	2
35	700306		KEY, 3/16 x ¼ x 2½" to T-5472, TB-6544, HT-5289, HTB-6632	1
35	110-09		KEY, 1/4 x 1/4 x 3, from T-5498, TB.6817 HTB 6736	1
36-1	125-25		DRIVE BELT. TEC, 1-3/16 wide by 45-3/4" O.C.; used with key Nos 1-1, 6-1 and 37-1 to T-5472 TB-6544, HT-5289, HTB-6636	1
36-2	126-05		DRIVE BELT. TEC, 1-7/16 wide by 48" O.C.; used with key No.s 1-2. 6-2 and 37-2; from T-5498 TB-6817, HTB-6736	1
37	126-03	RO	SWIVEL RETAINER. 13/64 hole	1
38	103-64		SCREW. #8-32 x 5/16"	1
39	107-06		RETAINING RING	1
40	107-01		RETAINING RING, .810 ID, AM140087	1
41	612-18		LH STEERING LEVER, (Left Side Steer) to T-5091, TB-5471, HT-5066, HTB-5664	1
42	612-19		RH STEERING LEVER, (Left Side Steer) to T-5091, TB-5471, HT-5066, HTB-566	1
43	111-04		SPIROL PIN, 5/16 x 1¼"	2
44	61242		STEERING SHAFT, ⅞" (Left Side Steer) to T-5091, TB-5471, HT-5066, HTB-5664	1
45a	117-04		NYLON LOCKNUT, 5/16 - 24	2
45b	117.04		NYLON LOCKNUT, 5/16 - 24	2
46	103-46		HHCS, 5/16 - 24 x 1	2
47	612-20		BRAKE ROD CLAMP	2
48	612-21		BRAKE ADJ. ROD.	2
49	612-22		BRAKE CAM	2
50	108-24		SAE WASHER, 5/16"	2
51	100-03		COTTER PIN, 3/32 x ¾"	2
52		NA AC	LH BRAKE ASS'Y. use part NO. 100-72B below; see group (13.0 Brakes — Mechanical	
52	100-72B	RO	LH BRAKE ASS'Y; see group (13.0 Brakes — Mechanical	1
53		NA AC	RH BRAKE ASS'Y. use part NO. 100-72A below; see group (13.0 Brakes — Mechanical	
53	100-72A	RO	RH BRAKE ASS'Y; see group (13.0 Brakes — Mechanical	1
54		NA	INNER CABLE, Throttle, use 56	1
55		NA	OUTER CABLE. Throttle, use 56	1
56	61246	RO	THROTTLE CABLE ASS'Y, 58". with sleeve	1
57	100-64		TIE RAP	2
58	100-57/58	AS RO	DUMMY GRIP, avail. only with 59 as a set	1
59	100-57/58	AS RO	THROTTLE TWIST GRIP, avail. only with 58 as a set	1
60	601-57	RO	INNER AND OUTER CHOKE CABLE	1
61	117-45		JAM NUT, ½ -20	1
62	117-54		PAL NUT, ½ - 20	1
63	601-49		CHOKE KNOB, plastic	1
64	108-32		INTERNAL TOOTH LOCKWASHER, ⅜", use is recommended on all models	2
65	61282		LH STEERING LEVER, (Right Side Steer) from T-5117, HTB-5665, K-5092	1
66	612.83		RH STEERING LEVER, (Right Side Steer) from T-5117, HTB-5665, K-5092	1
67	61281		STEERING SHAFT, %", (Right Side Steer) from T-5117, HTB-5665, K-5092	1
68	125-88	RR	SPRING, 1¾" lg. , see Parts Bulletin PB.05	1
69	x-1351		HHCS, 1/2-14 UNS x 1-1/4; see key No. 6-2	1
70	X-1250		FLATWASHER, 1/2 x 1-1/2 x 11 ga.; see key No. 6-2	1
71-1	125-38		DRIVEN CLUTCH, Salsbury 780. used with Nos. 1-1 6-1, 36-1; to T-5472. TB-6544, HT-5289. HTB-6632: see group (9.0 Clutches — Salsbury)	1
71-2	125-80		DRIVEN CLUTCH, Power Bloc, used with Nos. 1-2, 6-2; T-5498 to T-5868, TB-6817 to TB-7236, HTB-6736 to HTB-7339; see group (11.0 Clutches)	1
71-3	126-24		DRIVEN CLUTCH, Power Bloc, used with No. 1-2, 63; from T-5872. TB.7443, HTB.7447: see group (11.0 Clutches — Power Bloc)	1
72	103-34		HHCS, 3/8 — 16 x 1 1/4"	1
73	612-01		STEERING BASE, (Left Side Steer only); to T-5091 TB-5471 HT-5066. HTB-5664	1

3.0 Power Pack – Kohler-8-I/C (KB Model)

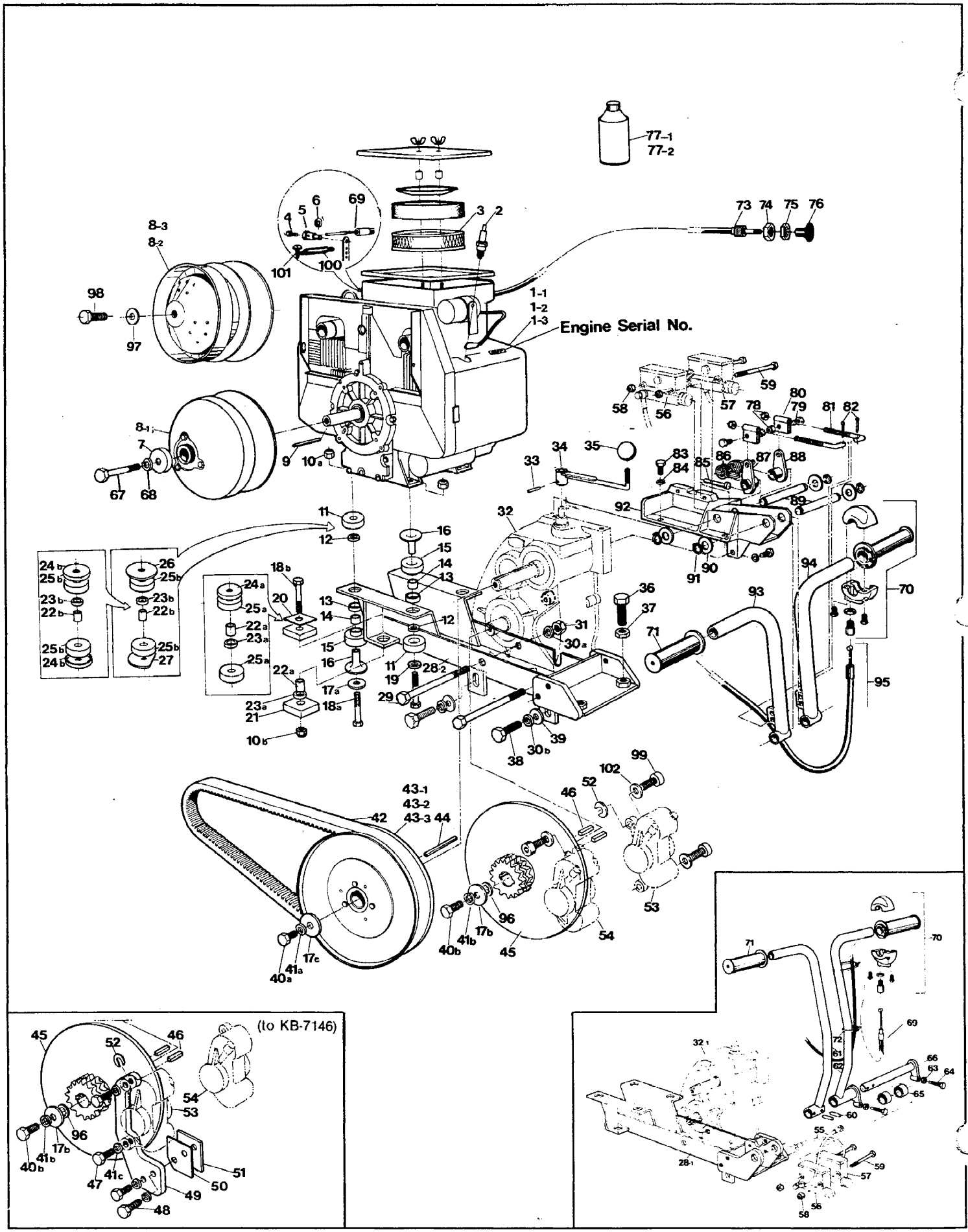

3.0 Power Pack — Kohler-8-I/C (KB Model)

K y No	Part No.	emark:	Description	ty
1-1	125-60	NA	KOHLER ENGINE, KT-17, 1" crankshaft keyed, Incl Nos. 2 & 3; KB-3972 to KB-5483; replace with No. 1-3, see Parts Bulletin A-PB-18	1
1-2	125-61	NA	KOHLER ENGINE, KT.17. 1" crankshaft threaded, Incl Nos. 2 & 3; KB-5489 to KB-7146; replace with No. 1-3, see Parts Bulletin A-P-18	1
1-3	126-15	RO	KOHLER ENGINE. Magnum 691cc, 1" crankshaft threaded. Incl Nos. 2 a 3; from KB-7147	1
2	125.72		SPARK PLUG, see key No. 1	2
3	125-71		AIR FILTER ELEMENT, see key No. 1	1
4	103-64		SCREW. #8-32 x 5/16	1
5	126-03		SWIVEL RETAINER, 13/64" hole	1
6	107-06		RETAINING RING	1
7	703135		WASHER-CUP. KB-3972 to KB-5483	1
8-1		NA AC	DRIVER CLUTCH, Salsbury-1190, KB-3972 lo KB-5483; see group (10.0 Clutches — Salsbury 1190) for replacement details.	1
a2	125-79		DRIVER CLUTCH, Power Bloc. threaded bore; Incl Nos. 97, 98; used with 4-3-2 KB-5489 to KB-7445; see group (11.0 Clutches — P.B.); replace with 8-3 if not available	1
a3	126-23		DRIVER CLUTCH, Power Bloc, threaded bore; Incl Nos. 97, 98; used with 43-3; from KB-7446; see group (11.0 Clutches — Power Bloc)	1
9	110-09		KEY, ¼ x ¼ x 3'. KB-3972 to KB-5483	1
10a	117-24		NYLON LOCKNUT, ⅜ - 24	4
10b	117-24		NYLON LOCKNUT, ⅜ - 24	2
11	125-67		REBOUND MOUNTS, Incl No. 12; from KB-4106	4
12		AA	WASHER, Special .12 x .95, see No.11; from KB-4106	4
13	611-52		SPACER RING, ⅛ x .925 x 1 OD, from KB-4106 to KB-4534	4
14	125-70		RUBBER BUSHING, from KB-4106	4
15	125-66		LOAD MOUNT, from KB-4106	4
10	125-69		STEEL TUBE SPACER, from KB-4106	4
17a	108-18		SPEC WASHER, 13/32 x 1⅜ x 11 ga, from KB-4106	2
17b	108-18		SPEC WASHER, 13/32 x 1⅜ x 11ga	2
17c	108-18		SPEC WASHER, 13/32 x 1⅜ x 11ga	1
18a	103-19		HHCS, ⅜ - 24 - 2½	4
18b	103-19		HHCS, ⅜ - 24 - 2½	2
1S	108-15		SAE WASHER, ⅜, from KB-4106	2
20	610-42		HINGE PLATE. 2 x 2 x 14ga., from KB-4076	2
21	125-65		RUBBER HINGE, ½ x 2 x 2, from KB-4076	4
22a	610-36		MOTOR MOUNT BUSHING. 9/16 x 1⅛	2
22b	610-36		MOTOR MOUNT BUSHING. 9/16 x 1⅛ from KB-3972 to KB-4105 approx.	4
23a	202-24		RUBBER WASHER, ¼ x ⅜ x 1	2
23b	202-24		RUBBER WASHER, ¼ x ⅜ x 1 from KB-3972 to KB-4105 approx.	4
24a	202-22		FLANGED WASHER, use 20 if not avail. from KB-3972 to KB-4011	2
24b	202-22		FLANGED WASHER, KB-3972 to KB-4011 if not avail. use key No. 26 & 27	8
25a	202-20		RUBBER MOUNT, 1/2 x 2". KB-3972 lo KB-4011, if not avail. use key No. 20	4
25b	202-20		RUBBER MOUNT, ½ x 2 from KB-3972 to KB-4011	8
26	108-20		WASHER, ⅜ x 2⅜ x 11ga., use No. 24b if not avail. from KB-4076 to KB-4105 approx.	4
27	108-19		WASHER. ⅜ x 2⅜ x 11ga., trimmed, use 24b If not avail. from KB-4076 to KB-4105 approx.	4
28-1	611-50	NA	POWER PACK FRAME. I/C, Left Side Steer; replace with No. 28-2 and ARGO KIT# 666; also requires new mounts Nos. 11 to 16; KB-3972 to KB-5337	1
28-2	611-57		POWER PACK FRAME, I/C, Right Side Steer, 5/16' mount holes; uses Nos. 11 to 16. 78 to 95, from KB-5342	1
29	103-20		HHCS. ½ - 13 x 6½"	2
30a	108-07		LOCKWASHER, ½"	2
30b	108-07		LOCKWASHER. ½"	2
31	117-06		HEX NUT. ½ - 13	2
32'	61417		TRANSMISSION. see group (1.0 Transmission) for series numbers and components	1
				1
33	111-01		SPIROL PIN, 5/32 x 1	1
34	610-44	RO	SHIFT LEVER ASS'Y, I/C	1
35	601-12		BALL KNOB, plastic	1
36	103-87		HHCS. ½ - 20 x 2	2
37	117-45		JAM NUT, ½ - 20	2
38	1—21		HHCS. ½ - 20 x 1½	2
39	106-09		FLATWASHER. ½ x 1⅜"	2
40a	103-17		HHCS. ⅜ - 16 x 1	1
40b	1—17		HHCS, ⅜ - 16 x 1	2
41a	106-06		LOCKWASHER. ⅜	1
41b	108-06		LOCKWASHER, ⅜	2
41c	108-06		LOCKWASHER ⅜	8

ey No	Part No	emark	Description	ty
12			DRIVE BELT. 52" OC	1
13-1		NA	DRIVEN CLUTCH, Salsbury-1190; KB-3972 to KB-5483; see group (100 Clutches — Salsbury) lor replacement details.	1
13-2	125 80		DRIVEN CLUTCH, Power Bloc; used with 8-2, KB-5489 to KB-7445; see group (11.0 Clutches) replace with No. 43-3 if not available.	1
13-3	126-24		DRIVEN CLUTCH, Power Bloc; used with 83, from KB-7446; see group (11.0 Clutches)	1
44	700306		KEY, 3/16 x ¼ x 4" to KB-5483	1
44	110-09		KEY, ¼ x ¼ x 3" from KB-5489	1
45	61024		BRAKE DISC, 40 - 2 x 15 T	2
46	110-08		KEY, ¼ x ¼ x 1¼	4
47	103-60		HHCS, ⅜ - 24 x 1	6
48	103-18		HHCS. ⅜ -24 x 1⅜	2
49	611-26		BRAKE CAUPER BRACKET, I/C to KB-7146	2
50	61149		BRAKE BRKT SHIM, 2 x 2 x 20 ga., as required	2
51	611-54		BRAKE BRKT SHIM, 2 x 2 x 11ga., an required	1
52	114-03		SHIM WASHER. ⅜ x 1 x 1/32, as required	2
53	166-01		LH BRAKE CALIPER, group (14.0 Brakes - Hydraulic)	1
54	166-02		RH BRAKE CALIPER, group (14.0 Brakes - Hydraulic)	1
55	163-01		HYDRL HOSE ASS'Y, 300 mm, see group (14.0 Brakes - Hydraulic)	2
56	165-06		MASTER CYLINDER, located on left , see group (14.0 Brakes - Hydraulic)	1
57	165-05		MASTER CYLINDER, louted on right , see group (14.0 Brakes - Hydraulic)	1
58	117-27		NYLON-LOCKNUT. ¼ - 20	2
59	103-66		HHCS, ¼ - 20 x 4"	2
60	111-04		SPIROL PIN, 5/16 x 1¼", KB-3972 to KB-5337	2
61	612.35		LH STEERING LEVER, I/C, KB-3972 lo KB-5337.	1
62	612.56		RH STEERING LEVER, I/C, KB-3972 to KB-5337	1
63	160-20		HEX NUT, M8 x 1. KB-3972 to KB-5337	2
64	160-43		HEX BOLT. M8 x 1 x 35, KB-3972 to KB-5337	1
65	612-59		SPACER BUSHING. .693" LG. KB-3972 to KB-5337	2
66	61261		STEERING SHAFT ASSY. ⅞", KB-3972 to KB-5337	1
67	103-50		HHCS, 711620 x 3-34". KB-3972 to KB-5483	1
68	10827		LOCKWASHER, 7/16", KB-3972 to KB-5483	1
69		NA	THROTTLE CABLE ASS'Y, 58", 1/8 sleeve, use part No. 612-85 below	1
69	612-85	RO	THROTTLE CABLE ASS'Y. 58", 3/16 sleeve, see 4. KB-3972 to KB-5337	1
70	100-57	AS'	THROTTLE TWIST GRIP, avall. only with 71	1
71	100-58	AS	DUMMY GRIP, avail. only with 70	1
72	100-64		TIE - RAP	2
73	601-57	RO	INNER and OUTER CHOKE CABLE	1
74	117-45		JAM NUT, ½ - 20	1
75	117-54		PAL NUT, ½ - 20	1
76	601-49		CHOKE KNOB - plastic	1
77-1	125 85		ARGO BRAKE FLUID, Dot 4; 350 ml; to KB-7146	
77-2	126-19		SILICONE BRAKE FLUID, Dot 5; 355 ml from KB-714	
78	117-04		NYLON LOCKNUT, 5/16 - 24, from KB-5342	4
79	103-48		HHCS, 5/16 - 24 x 1", from KB-5342	2
80	612-20		STEERING ROD CLAMP. from KB-5342	2
81	612-21		STEERING ROD, 5/16 - 24, from KB-5342	2
82	100-03		COTTER PIN, 3/32 x ¾", from KB-5342	2
83	103-28		HHCS, 5/16 - 18 x ⅝", from KB-5342	3
84	108-05		LOCKWASHER.5/16, from KB-5342	3
85	61289		MASTER CYLINDER PLUNGER PIN. 5/16 x 21116 Lg, from KB-5342	2
86	125-82		SPRING, double action torsion, from KB-5342	1
87	612-78		CAM and BUSHING ASS'Y LH.. from KB-5342	1
88	612-79		CAM and BUSHING ASS'Y R.H., from KB-5342	1
89	612-68		STEERING SHAFT. ½ x 3½", from KB-5342	2
90	108-35		SAE WASHER. W, from KB-5342	4
91	107-05		RETAINING RING. .416 I.D., from KB-5342	4
92	612-74		MASTER CYLINDER BRACKET, from KB-5342	1
93	612-65		STEERING LEVER ASS'Y, LH. short. from KB-5342	1
94	612-66		STEERING LEVER ASS'Y. R.H. short, from KB-5342	1
95	612 75	RO	THROTTLE CABLE ASS'Y. 42-1/2" lg; from KB-5342	1
96	108-32		INTERNAL TOOTH LOCKWASHER	2
97	X-1250		FLATWASHER, 1/2", see NO. 8-2, 8-3	1
98	x.1351		HHCS. 1/2-14 x 1-1/4", see 8-2, 8-3	1
99	103-41		SHCS. 3/8-16 x 1-1/4"	4
100	125-88	RR	SPRING, 1-3/4" lg, throttle return	1
101	103-48		SELF TAP SCREW. #10 x 5/8"	1
102	108-23		SAE WASHER. 3/8", gold finish	4

4.0 Power Pack — Kohler-6-I/C (K Model)

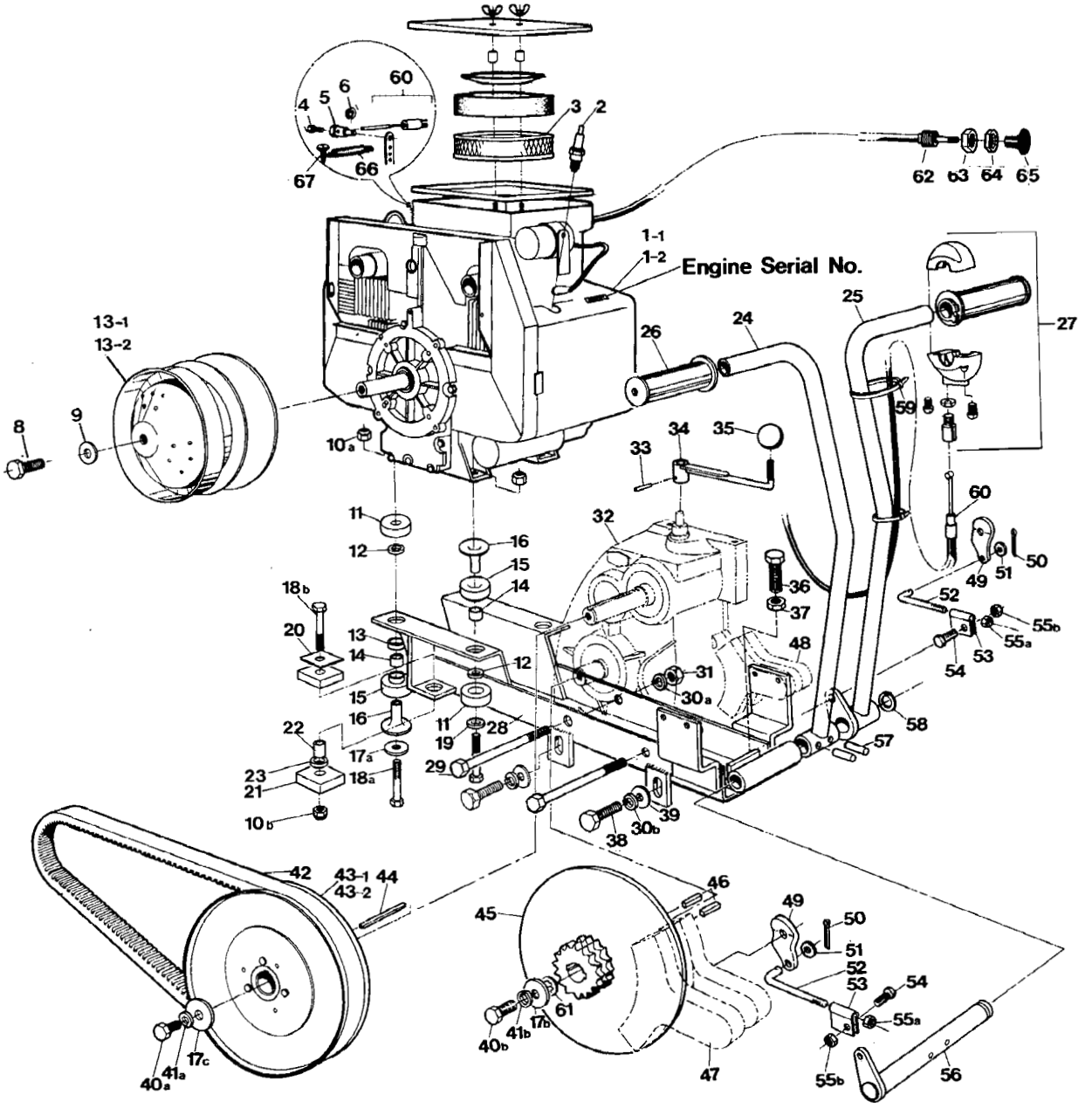

4.0 Power Pack — Kohler-6-I/C (K Model)

Key No	Part No.	Remark	Description	Qty.
1-1	125-81	NA	KOHLER ENGINE KT-17 **Incl** Nos. 2 **8** 3 K-5092 **to** K 5668, **replace with** No.1 2 **see Parts Bulletin A-PB-18 for** details	1
1-2	126-15		KOHLER ENGINE **Magnum** 691cc **magneto electrical** Incl Nos **2** & 3 from K 5706	1
2	125-72		SPARK PLUG, **see** 1	1
3	125-71		AIR FILTER ELEMENT, CA78, **see** 1	1
4	103-64		SCREW, #8-32 x 5/16"	1
5	126-03		SWIVEL RETAINER. 13/64" hole	1
6	107-06		RETAINING RING	1
8	X-1351		HHCS, 1/2-14 UNS x 1-1/4", **see key** No. 13	1
9	X-1250		FLATWASHER 1/2 x 1-1/2 x 11 **ga.. see key** No. 13	1
10a	117-24		NYLON LOCKNUT, 3/8 -24	4
10b	117-24		NYLON LOCKNUT, 3/8 -24	2
11	125-67		REBOUND MOUNTS, **Incl 12**	4
12		AA	WASHER, **Special** .12 **x** .95, **see** 11	4
13-1	125-79		DRIVER CLUTCH, **Power Bloc; Incl** Nos. **8,** 9; K-5092 to K-5835; **see group** (11.0 **Clutches** — P.B.) **replace with** 13-2 **if not available.**	1
13-2	126-23		DRIVER CLUTCH, **Power** Bloc; Incl Nos. 8, 9; **from** K-5874: see group (11.0 Clutches — P.B.)	1
14	125-70		RUBBER BUSHING	4
15	12566		LOAD MOUNT	4
16	125-69		TUBE SPACER	4
17a	108-18		SPEC WASHER, 13/32 x 1⅜ x 11 ga.	2
17b	108-18		SPEC WASHER, 13/32 x 1⅜ x 11 ga.	2
17c	108-18		SPEC WASHER, 13/32 x 1⅜ x 11 ga.	1
18a	103-19		HHCS, 3/8 -24 x 2½"	4
18b	103-19		HHCS, 3/8 - 24 x 2½"	2
19	108-15		SAE WASHER, 3/8"	2
20	610-42		HINGE PLATE, 2 x 2 x 14 ga.	2
21	125-65		RUBBER HINGE, ½ x 2 x 2"	4
22	610-36		MOTOR MOUNT BUSHING, 9/16 x 1⅛"	2
23	202-24		RUBBER WASHER, ¼ x ⅜ x 1	2
24	61282		LH STEERING LEVER. **(right side steer)** from K-5092	1
25	612-83		RH STEERING LEVER, **(right Side steer only) from** K-5092	1
26		AS	DUMMY GRIP, **avail. only with** 27	1
27	100-57	AS	THROTTLE TWIST GRIP ASS'Y, **avail. only with** 26	1
28	611.60		POWER PACK FRAME, 6 - **I/C, from** K-5092	1
29	103-20		HHCS, ½ - 13 x 6½"	2
30a	108-07		LOCKWASHER ½"	2
30b	108-07		LOCKWASHER ½"	4

Key No	Part No.	Remarks	Description	Qty.
31	117-06		HEX NUT, ½ - 13	2
32	610-17		TRANSMISSION, **see group (1. Transmission)**	1
33	111.01		SPIROL PIN, 5/32 x 1	1
34	610-44		SHIFT LEVER ASS'Y, I/C, (drill 5/32" **hole)**	1
35	601-12		BALL KNOB, **plastic**	1
36	103-87		HHCS, ½ - 20 x 2"	2
37	117-45		JAM NUT, ½ - 20	2
38	103-21		HHCS, ½ - 20 x 1½"	4
39	108-09		FLATWASHER, ½ x 1⅜"	4
40a	103-17		HHCS. ⅜ - 16 x 1	1
40b	103-17		HHCS. ⅜ - 16 x 1	2
41a	108-06		LOCKWASHER, ⅜	1
41b	108-06		LOCKWASHER, ⅜	2
42	125-56		DRIVE BELT, 52" OC.	1
43-1	125-80		DRIVEN CLUTCH, **Power** Bloc; K-5092 **to** K-5835; **see group** (11.0 Clutches — **Power Bloc): replace with** 43-2 **if not available.**	1
43 2	126 24		DRIVEN CLUTCH, Power Bloc: **from** K-5874; see **group** (11.0 **Clutches** — **Power Bloc)**	1
44	110-09		KEY, ¼ x ¼ x 3¼"	1
45	610-24		BRAKE DISC, 40 - 2 x 15T	2
46	110-08		KEY, ¼ x ¼ x 1%	4
47	100-72B		LH BRAKE ASS'Y. **see group** (13.0 **Brakes . Mech)**	1
48	100-72A		RH BRAKE ASS'Y, **see group** (13.0 **Brakes. Mech)**	1
49	612-22		BRAKE CAM	2
50	100-03		COTTER PIN	2
51	108-24		SAE WASHER, 5/16"	2
52	612-21		BRAKE ADJUSTING ROD	2
53	612-20		STEERING ROD CLAMP	2
54	103-46		HHCS, 5/16-24 x 1"	2
55a	117-04		NYLON LOCKNUT, 5/16-24	2
55b	11704		NYLON LOCKNUT, 5/16-24	2
56	61281		STEERING SHAFT ASS'Y **(right side steer only)**	1
57	111-04		SPIROL PIN, 5/16 x 1¼"	2
58	107-01		RETAINING RING, .810 ID, AM140087	1
59	10064		TIE RAP	2
60	612.85	RO	THROTTLE CABLE ASS'Y, 3/16' **sleeve. drill** No 5 to **fit sleeve, if necessary**	1
61	108-32		INTERNAL TOOTH LOCKWASHER, ⅜"	2
62	601-57	RO	INNER **and** OUTER CHOKE CABLE	1
63	117-45		JAM NUT, ½-20	1
64	117-54		PAL NUT, ½-20	1
65	601-49		CHOKE KNOB, **plastic**	1
66	125-88	RR	SPRING, 1¾" lg.	1
67	103-48		SELF TAP SCREW, #10 x ⅝"	1

5.0 Power Pack — Briggs & Stratton TWIN (S, SB Models)

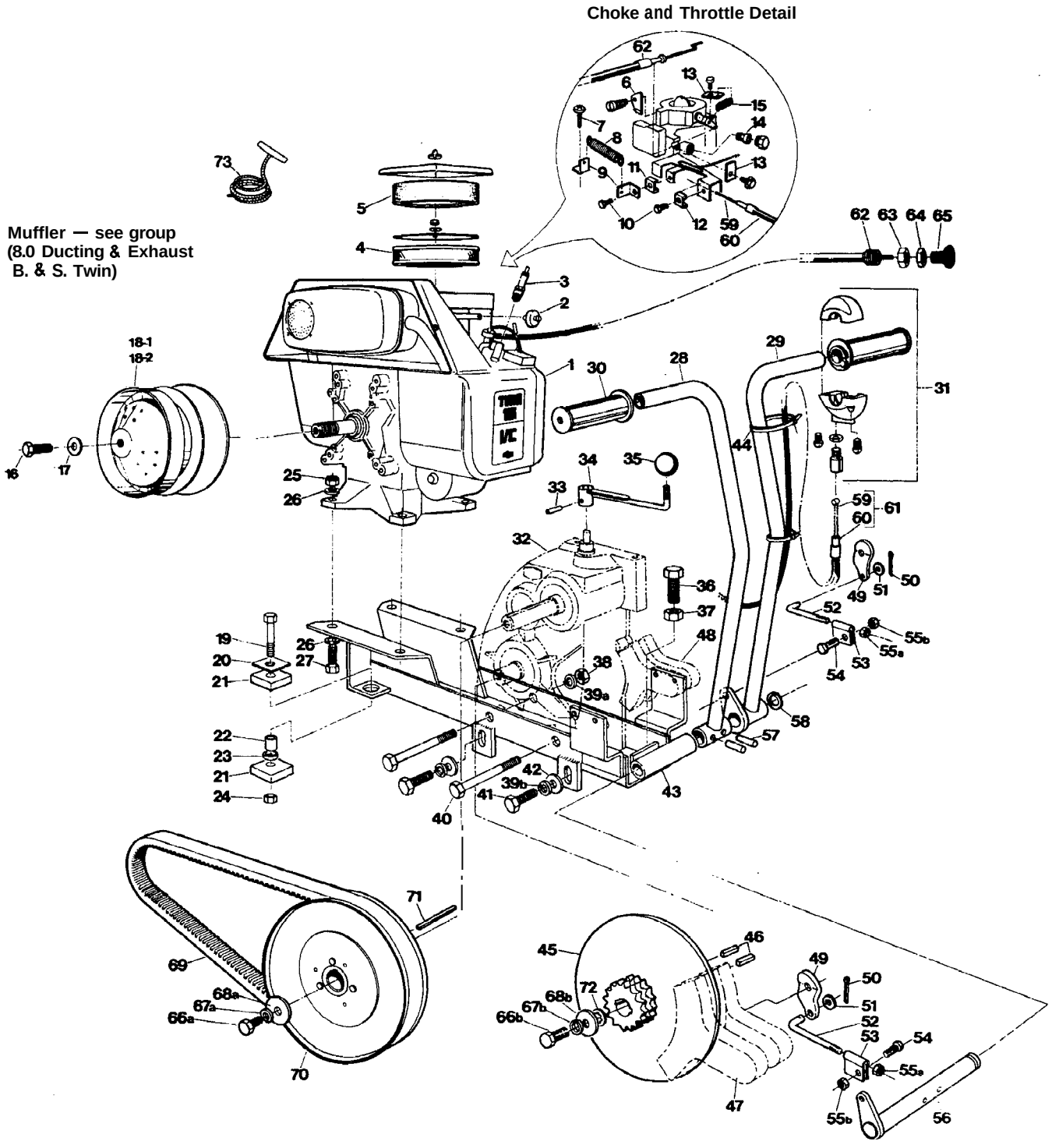

5.0 Power Pack — Briggs & Stratton TWIN (S,SB Models)

Key No.	Part No.	Remarks	Description	Qty
1	1		BRIGGS & STRATTON ENGINE, 656cc., model 402437 type 0707. ducted: threaded crankshaft, Incl Nos. 2 to 15, 69 & Muffler. (See B & S Engine Parts Manual, #370-12. for engine components).	1
2	125-64		FUEL FILTER, G-1, replaces B & S filter	1
3	126-30		SPARK PLUG, Champion RJ-12,	2
4	394018		PAPER FILTER	1
5	2		FOAM PRE-CLEANER	1
6	222923		THROTTLE RESTRICTER	1
7	103-48		SELF TAP SCREW, #10 x 3/4'	1
8	125-88		THROTTLE RETURN SPRING	1
9	6		THROTTLE RETAINER CLIP	2
10	93496		SCREW, #10-32 x 5/8"	2
11	610-70		THROTTLE CABLE CLIP	1
12	221535		CLAMP	1
13	601-86		CHOKE CABLE RETAINER	2
14	231339		CARB JET	1
15	126-26		CHOKE RETURN SPRING	1
16	X-1351		HHCS, 1/2-14 UNS, see key No. 18	1
17	X-1250		FLATWASHER, 1/2 x 1-1/2 x 11 ga., see key No. 18	1
18-1	125-79		DRIVER CLUTCH, Power Bloc; Incl Nos. 16. 17; S-5759 to S-5871; see group (11.0 Clutches — Power Bloc); replace with 18-2 if not available.	1
18-2	126-23		DRIVER CLUTCH, Power Bloc: Incl Nos. 16, 17; from S-5873; see group (11.0 Clutches — P.B.)	1
19	103-19		HHCS, 31824 x 2-1/2"	2
20	610-42		HINGE PLATE, 2 x 2 x 13 ga	2
21	125-65		RUBBER HINGE, 1/2 x 2 x 2"	4
22	610-36		MOTOR MOUNT BUSHING. 9/16 x 1-1/8" x 14 ga.	2
23	202-24		RUBBER WASHER, 114 x 9116 x 1" OD.	2
24	117-24		NYLON LOCKNUT, 3/8-24	2
25	117-21		NYLON LOCKNUT, 5/16-18	4
76	108-24		SAE WASHER, 5/16"	8
27	103-57		HHCS, 5/16-18 x 1-1/2", grade 5	4
28	612-82		LH. STEERING LEVER	1
29	612-83		RH. STEERING LEVER	1
30		AS	DUMMY GRIP, comes with No. 31 as set only	1
31	100-57	AS	THROTTLE TWIST GRIP ASS'Y, comes with No. 30	1
32	610-17		TRANSMISSION, see group (1.0 Transmission)	1
33	111-01		SPIROL PIN, 5/32 x 1"	1
34	610-44		SHIFT LEVER ASS'Y, (drill 5/32' hole)	1
35	601-12		BALL KNOB, plastic	1
36	103-87		HHCS, 1/2-20 x 2 '	2
37	117-45		NUT. 1/2-20	2
38	117-06		HEX NUT, 1/2-13,	2

Key No	Part No	Remarks	Description	Qty.
39a	108-07		LOCKWASHER. 1/2"	
39b	108-07		LOCKWASHER, 1/2"	
40	103-20		HHCS, 1/2-13x 6-1/2"	
41	103.21		HHCS, 1/2-20 x 1-1/2"	
42	108-09		FLATWASHER, 1/2 x 1-3/8'	
43	611-33		POWER PACK FRAME, from S-5759	
44	10064		TIE RAP	
45	610-24		BRAKE DISC, 40 P — 2 x 15T	
46	11008		KEY, 114 x 1/4 x 1 114'	
47	100-72t		LH BRAKE ASS'Y, see group (13.0 Brakes — Mech)	
48	100721		RH BRAKE ASS'Y. see group (13.0 Brakes — Mech)	
49	612-22		BRAKE CAM	
50	100-03		COTTER PIN, 3/32 x 3/4"	
51	108-24		SAE WASHER, 5/16"	
52	612-21		BRAKE ADJUSTING ROD, 5/16-24	
53	612-20		STEERING ROD CLAMP	
54	103-46		IHCS. 5/16-24 x 1"	
55a	117-04		JYLON LOCKNUT, 5/16-24	
55b	117-04		NYLON LOCKNUT, 5/16-24	
56	612-81		STEERING SHAFT ASS'Y	
57	111-04		SPIROL PIN, 5/16 x 1-1/4"	
58	107-01		RETAINING RING, .810 ID, AM140087	
59	612-54		NNER THROTTLE CABLE WIRE, 3/16" sleeve	
60	612-55		OUTER THROTTLE CABLE HOUSING	
61	612-53		THROTTLE CABLE ASS'Y, Incl Nos. 59'8 60	
62	601-84		NNER & OUTER CHOKE CABLE	
63	117-45		AM NUT, 1/2-20	
64	117-54		AL NUT, 1/2-20	
65	601-49		CHOKE KNOB, plastic	
66a	103-17		IHCS. 3/8-16 x 1"	
66b	103-17		IHCS, 3/8-16 x 1"	
67a	108-06		LOCKWASHER, 3/8"	
67b	108-06		LOCKWASHER, 3/8"	
68a	108-18		SPEC. WASHER, 13/32 x 1 3/8" x 11 ga	
68b	108-18		SPEC. WASHER, 13/32 x 1 3/8" x 11 ga	
69	12556		DRIVE BELT, 52" OC.	
70-1	125-80		DRIVEN CLUTCH, Power Bloc; S-5759 to S-5871; see group (11.0 Clutches — Power Bloc), replace with 70-2 if not available.	
70-2	126.24		DRIVEN CLUTCH. Power Bloc; from S-5873; see group (11.0 Clutches — Power Bloc)	
71	110-09		KEY, 1/4 x 114 x 3 "	
72	108-32		NTERNAL TOOTH LOCKWASHER. 3/8"	
73	69932		STARTER ROPE	

6.0 Ducting & Exhaust – Tecumseh

All Tecumseh Models

to T-5472, TB-6544, HT-5289, HTB-6632

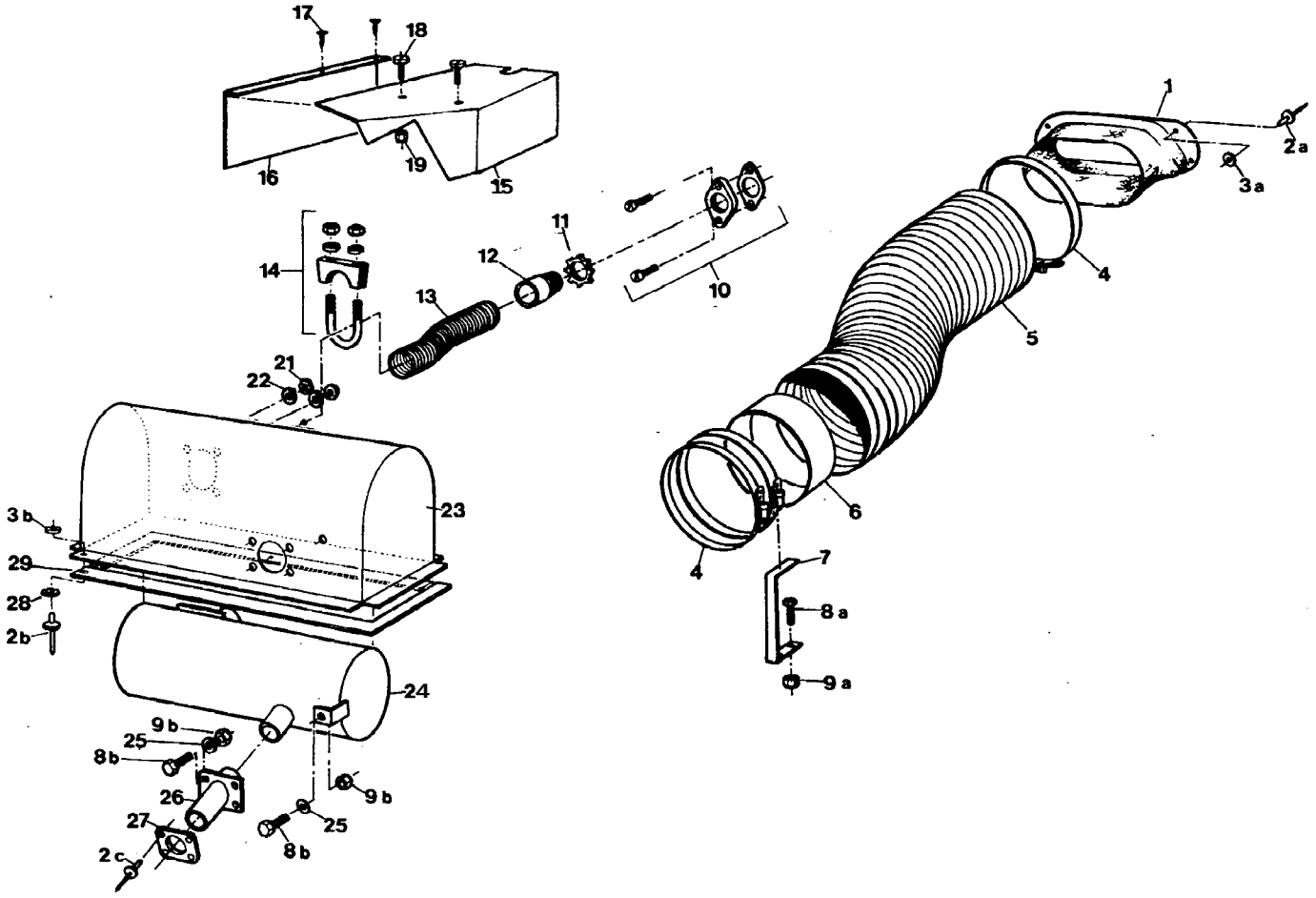

6.0 Ducting & Exhaust – Tecumseh

to T-5472, TB-6544, HT-5289, HTB-6632

ley No.	Part No.	emarks	Description	Qty.
1	601-26		AIR DUCT FLANGE, FRP	1
2a	120-09		RIVETS. Alum	4
2b	120-09		RIVETS, Alum	22
2c	120-09		RIVETS, Alum	4
3a	120-05		SPACERS, 3/16"	4
3b	12005		SPACERS, 3/16"	22
4	125-36		GEAR CLAMP, 6½"	3
5	601-37		FLEX DUCT, 6½ x 26"	1
6	604-34		FLEX DUCT MTG RING, 6"	1
7	60435		FLEX DUCT MTG BRKT	1
8a	103-09		HHCS. ¼ 28 x ¾	2
8b	103-09		HHCS. ¼ 28 x ¾	5
9a	117-01		NYLON LOCKNUT, ¼ 28	2
9b	11701		NYLON LOCKNUT ¼ 28	5
10	607-56	AS	EXHAUST ADAPTOR KIT Incl screws and gasket, replacement only	1
11	117-34		CONDUIT LOCKNUT 1" NPT	1
12	607-46		EXHAUST OUTLET TEC	1
13	607-32		FLEXTUBING, 1½ ID	1

ey No.	Part No.	emarks	Description	ty.
14	100-04		MUFFLER CLAMP. 1⅝"	1
15	610-59		HOT AIR DEFLECTOR	1
16	610-60		DEFLECTOR SIDE PLATE	1
17	103-48		SCREW, #10-⅝	2
18	103-25		PAN HD SCREW. 10-24 x ¾	2
19	117-10		NYLON LOCKNUT, 10 - 24	2
21	11746		PHILIDAS LOCKNUT. 5/16-24	4
22	108-24		SAE WASHER, 5/16	4
23	607-58		MUFFLER HOUSING, Sd. Ex. Long, T-3782 to T-3989 TB-2080 to TB-2646	1
23	607-75	RO	MUFFLER HOUSING, Sd. Ex. **Short,** from T-3900, TB-2647	1
24	607-57	RO	MUFFLER, Side Ex. TEC, from T-3782, TB-2080	1
25	108-08		SAE WASHER, ¼	2
26	607-61		SIDE EX. P'PE ASS'Y, from T-3782, TB-2080	1
27	607-62		SIDE EX GASKET. from T-3782. TB-2080	1
28	125-59	RR	FIBRE WASHER, use is recommended	22
29	607-83	RR	MUFFLER HOUSING GASKET. 2 required, from T-4937, TB-5359, HT-4889, HTB-5127.	2

6.1 Ductinq & Exhaust — Tecurnseh Counterbalanced

All Tecumseh Models
from T-5498, TB-6817, HTB-6736

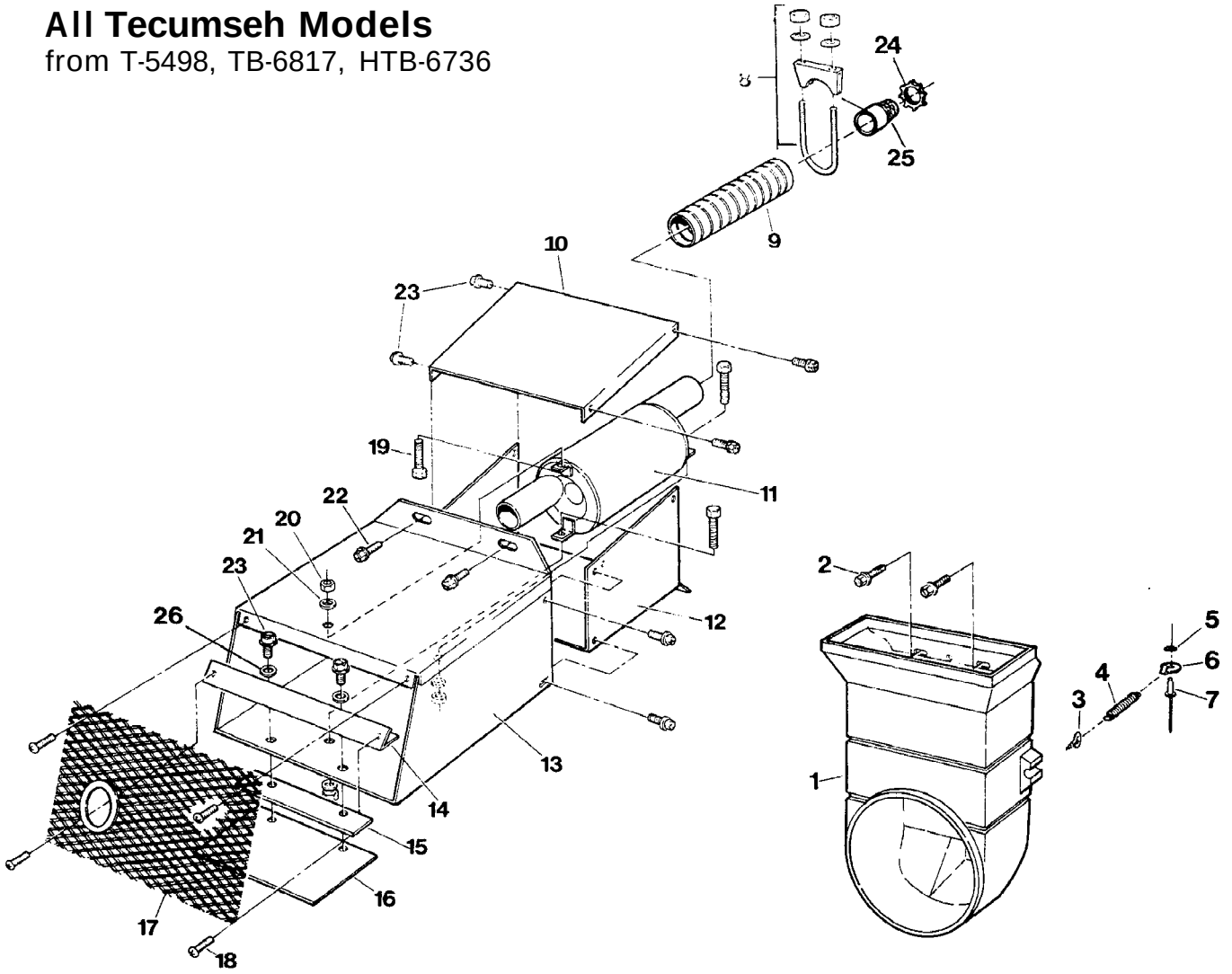

6.1 Ducting & Exhaust — Tec .Counterbalanced from T-5498, TB-6817, HTB-6736

Key No	Part No.	Remarks	Description	Qty.
1	603-52		AIR INTAKE DUCT, plastic	1
2	103.70		THREAD CUTTING SCREW, 1/4-20 x 112"	2
3	103-27		SCREW EYE, #8 x 1"	1
4	126-01		SPRING	1
5	120-19		SPACER, 1/8'' ID	1
6	126-02		HOOK	1
7	120-01		RIVET, #48	1
8	100-04		MUFFLER CLAMP, 1-5/8''	1
9	607-95		FLEX TUBING	1
10	607-96		ACCESS COVER	1
11	607.16		MUFFLER	1
12	60702		EXHAUST EXTENSION	1

Key No	Part No.	Remark	Description	Qty
13	607-79		AIR EXHAUST DUCT	1
14	607-05		AIR DEFLECTOR	1
15	607.04		EXHAUST GASKET	1
16	60743		EXHAUSTSUPPORT BRACKET	1
17	607.97		EXHAUST DUCTSCREEN	1
18	103-25		PAN HD SCREW, #10 24 x 314	4
19	103-08		HHCS, 114. 20 x 1"	3
20	117-20		HEX NUT, 114 - 20	3
21	108-03		LOCKWASHER, 1/4''	3
22	103-70		THREAD CUTTING SCREW, 114 20 x 1/2''	2
23	103-11		HHCS. 1/4 .20 x 1/2'', washer Hd.	10
24	117.34		CONDUIT LOCKNUT, 1" NPT	1
25	607-46		EXHAUST OUTLET TEC	1
26	125-59		FIBRE WASHER	2

'.0 Ducting & Exhaust — Kohler-I/C (K,KB Models)

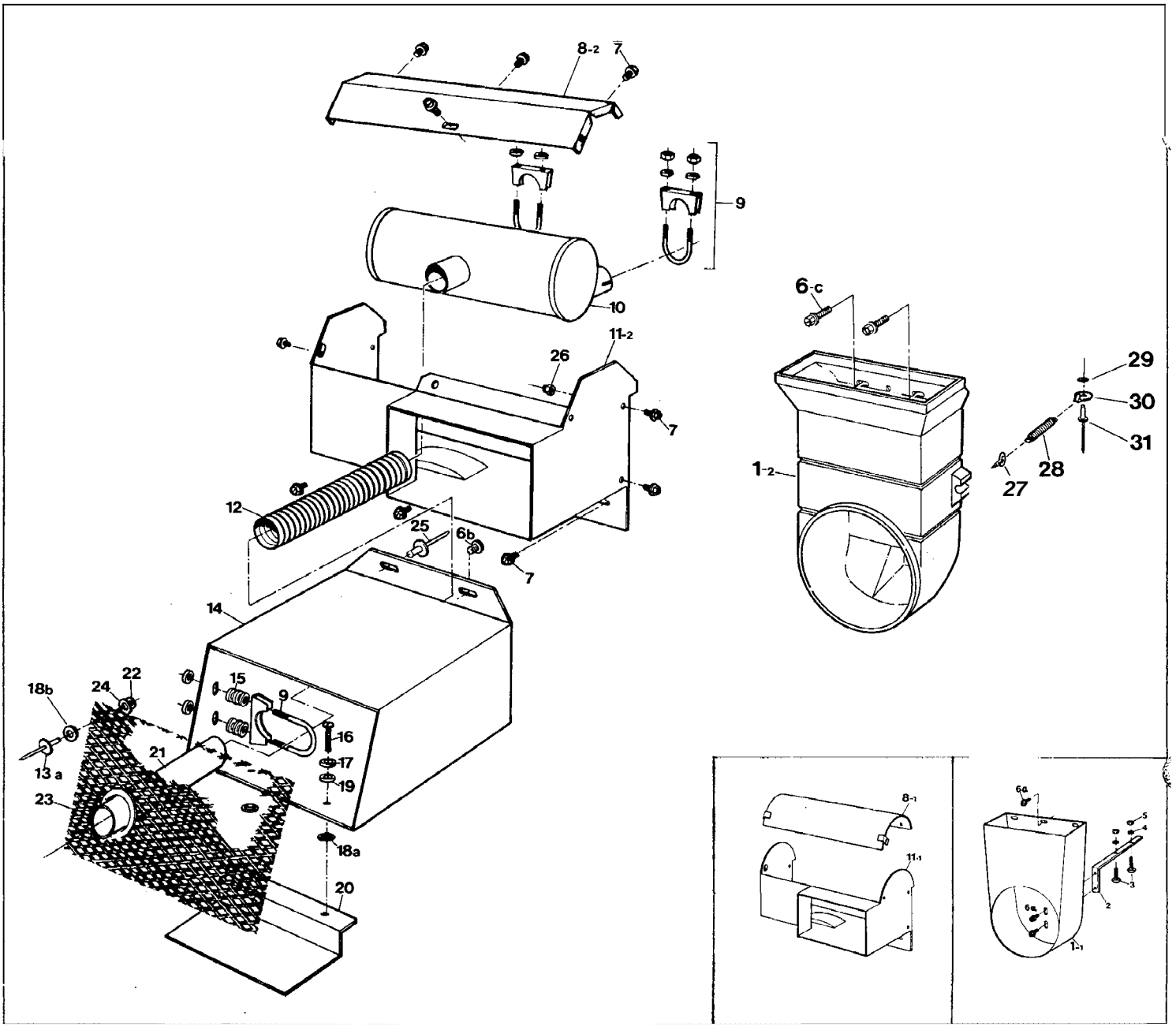

7.0 Ducting & Exhaust — Kohler-I/C

ey No	Part No.	emarks	Description	Qty.
1-1	60348	NA	AIR INTAKE DUCT, steel, use No. 1-2; KB-3972 to KB-6585, K-5092 to K-5445	1
1-2	603-51	RO	AIR INTAKE DUCT; Plastic, from KB-6586, K-5451. used with key No.s 27 to 31	1
3	103-13		CARRIAGE BOLT, 5/16 - 18 x 1"	2
4	108-05		LOCKWASHER, 5/16"	2
5	117-03		HEXNUT, 5/16 - 18	2
6a	103-70		THREAD CUTTING SCREW, ¼ - 20 x ½"	5
6b	103-70		THREAD CUTTING SCREW, ¼ - 20 x ½"	2
6-c	103-70		THREAD CUTTING SCREW, 1/4 - 20 x 1/2	2
7	103-11		HHCS, ¼ - 20 x ½", Washer Hd.	13
8-1		NA	MUFFLER HOUSINGCOVER. use #8 - 2 with 11-2, to KB-5254	1
8-2	607-85	RO	MUFFLER HOUSING COVER. use with key No. 11 2 only: from KB-5255 K-5451	1
9	100-98	RO	MUFFLER CLAMP. 1½" ID	3
10	607-77		MUFFLER, KT-17 & Maynum	1
11-1		NA	MUFFLER HOUSING. use 11 - 2 with 8 - 2, to KB-5254	1
11-2	607-84	RO	MUFFLER HOUSING, use with key No. 8-2 only: from KB-5255, K-5451	1
12	607-32		FLEXIBLE TUBING, 1½" ID	1
13	120-09	RO	RIVET	4

Key No.	Part No.	emark:	Description	ity.
14	607-79		AIR EXHAUST DUCT, I/C	1
15	108-24		SAE WASHER, 5/16"	8
16	10525		PAN HD SCREW, 10 - 24 x ¾"	2
17	108-11		LOCKWASHER 3/16"	2
18a	125-59		FIBRE WASHER, Grey	2
18b	12559		FIBRE WASHER, Grey	4
19	125-58		FIBRE WASHER, Black	2
20	607-81		AIR EXHAUST DUCT BRKT.	1
21	607-80		TAILPIPE, 1½ OD	1
22	120-05		SPACER 3/16"	4
23	601-48		AIR EXHAUST DUCT SCREEN	1
24	108-08		SAE WASHER, ¼"	4
25	120-13		RIVET #66, replaced by 6b	2
26	117-27		LOCKNUT, ¼ -20	2
27	103-27		SCREW EYE, #8 x 1"	1
28	126-01		SPRING, 2-3/4	1
29	120-19		SPACER, 1/8" ID.	1
30	12602		HOOK	1
31	120-01		RIVET, #48	1

8.0 Ducting & Exhaust — Briggs & Stratton-TWIN (S, SB Models)

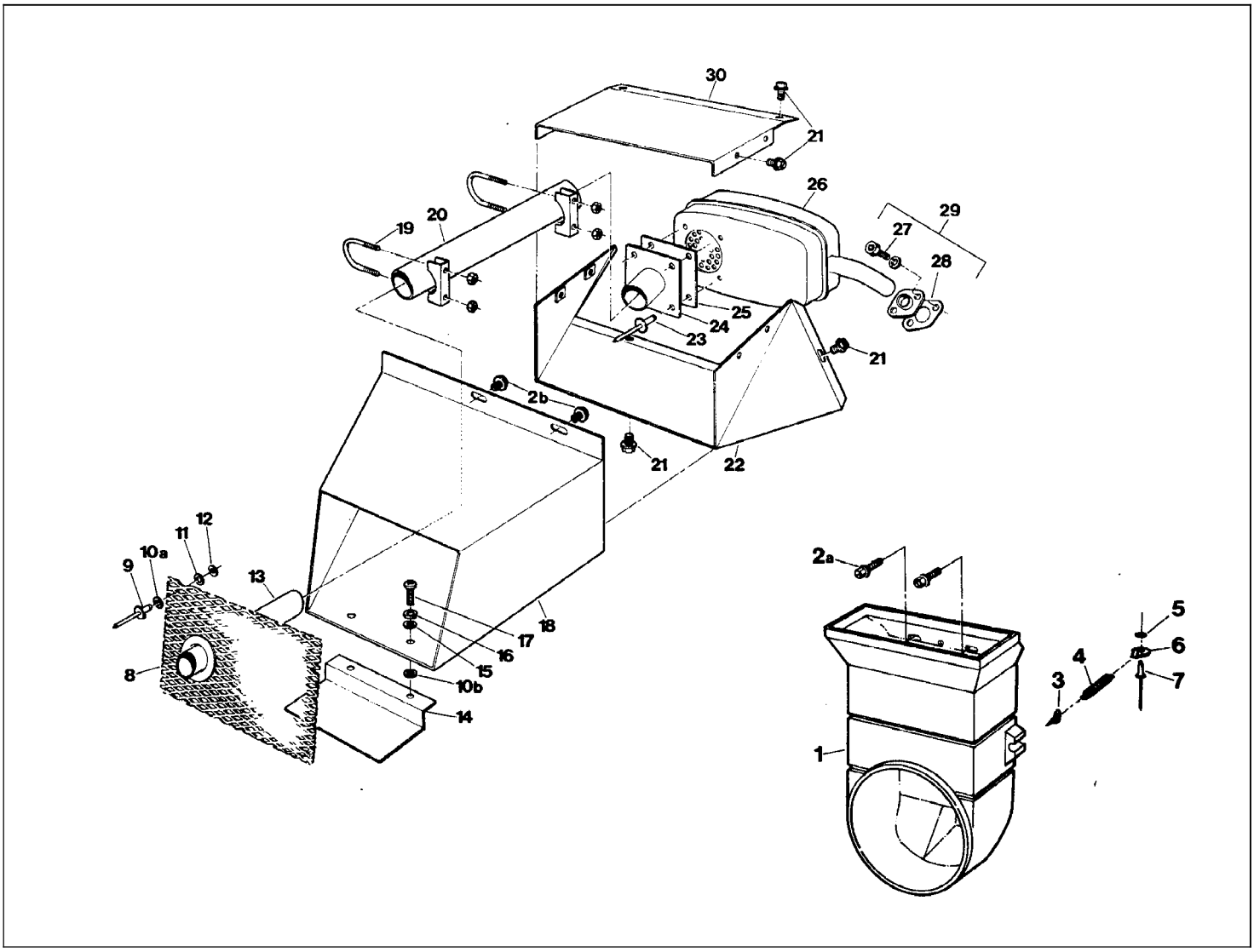

8.0 Ducting & Exhaust — Briggs & Stratton-TWIN

ey No.	Part No.	emarks	Description	Qty.
1	603-51		AIR INTAKE DUCT, **plastic**	1
2a	103-70		THREAD CUTTING SCREW, 1/4-20 x 112"	2
2b	103-70		THREAD CUTTING SCREW, 11420 x 1/2"	2
3	10327		SCREW EYE, **#8 x** 1"	1
4	126-01		SPRING, 2-3/4" lg.	1
5	120-19		SPACER. 1/8" ID	1
6	126-02		HOOK	1
7	120-01		RIVET, #48	1
8	601-48		AIR EXHAUST DUCT SCREEN	1
9	120-09		RIVET	4
10a	125-59		FIBRE WASHER, Grey	4
10b	125-59		FIBRE WASHER, Grey	2
11	108-08		SAE WASHER, 1/4"	4
12	120-05		SPACER. 3/16'	4
13	607-80		TAIL PIPE, 1-1/2" O.D.	1
14	607-81		AIR EXHAUST DUCT BRACKET	1

ey No.	Part No.	emark:	Description	ity.
15	125-58		FIBRE WASHER, **Black**	2
16	108-11		LOCKWASHER, 3116'	2
17	103-25		PAN HD. SCREW, 10-24 x 314"	2
18	607-06		AIR EXHAUST DUCT	1
19	100-98		MUFFLER CLAMP, 1-1/2" ID	2
20	607-32		FLEXIBLE TUBING, 1-1/2" ID	1
21	103-11		HHCS. 1/4-20 x 1/2", Washer Hd.	8
22	607-07		ENGINE AIR DUCT	1
23	120-25		RIVET, **steel**	4
24	607-09		MUFFLER OUTLET ASS'Y	1
25	607-12		MUFFLER OUTLET GASKET	1
26	394200		MUFFLER	1
27	93415		SCREW, see NO. 29	4
28	271174		GASKET, see No. 29	2
29	393483		ADAPTER ASS'Y., Incl Nos. 27 & 28	2
30	607-08		COVER, Engine Air Duct	1

Salsbury 780

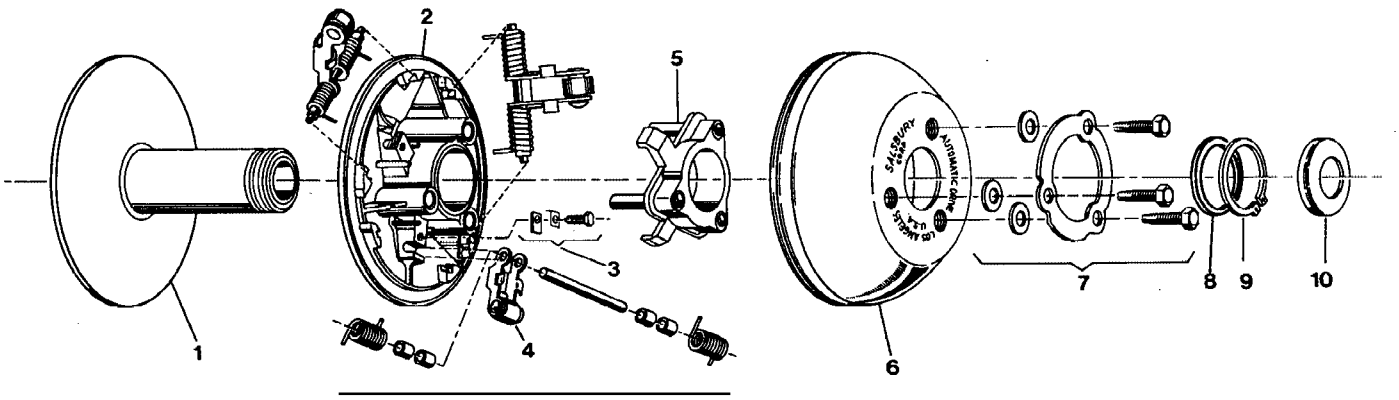

Driver

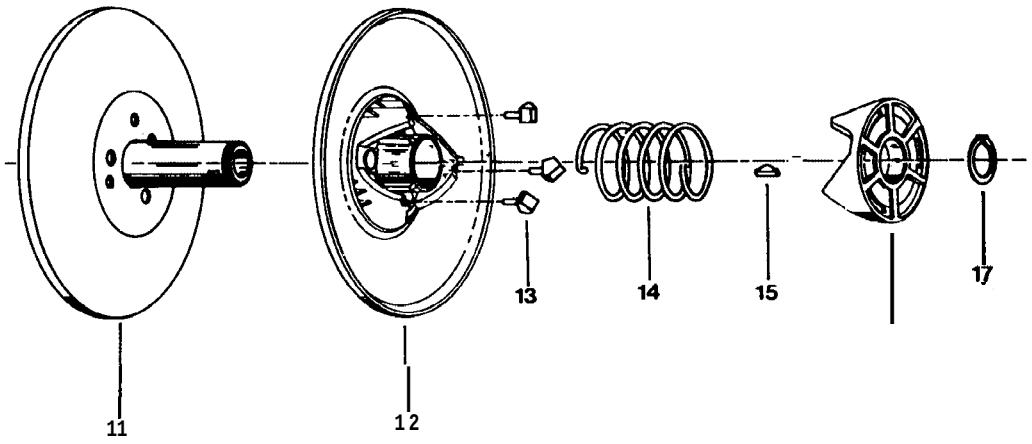

Driven

9.0 Clutches — Salsbury 780 — (Tec.)

to T-5472, TB-6544 HT-5289, HTB-6632

Key No.	Pan No.	Remark!	Description	Qty.
•	125-22	RO	DRIVER CLUTCH, 1519034-cycle. Incl Nos. 1 to 10	1
1	200003		FACE & HUB, fixed	1
2	602057		FACE ASS'Y, movable	1
3	690223	AS	KIT, Spring & Pin, set of three 3x	1
4	690224	AS	KIT, Roller Arm, set of three 3x	1
5	602122		SPIDER ASS'Y	1
6	702967		RAMP PLATE	1
7	690088		KIT, Lockplate	1
8	703046		Used as required	1
9	900009		RING, Retaining	1
10	703077		WASHER, Retaining	1

Key No	Part No.	Remarks	Description	Qty.
	125-38	RO	DRIVEN CLUTCH, 1520044-cycle. Incl Nos. 11 to 17	1
11	601973		FACE & HUB, fixed	1
12	601977		FACE ASS'Y, movable, Incl. 13	1
13	703113		BUTTON. Cam	3
14	703246		SPRING, Yellow	1
15	901687		KEY, Torque Cam	1
16	703703		CAM, 32'	1
17	900009		RING, Retaining	1

10.0 Clutches — Kohler I/C - KB Model from KB-3972 to KB-5483

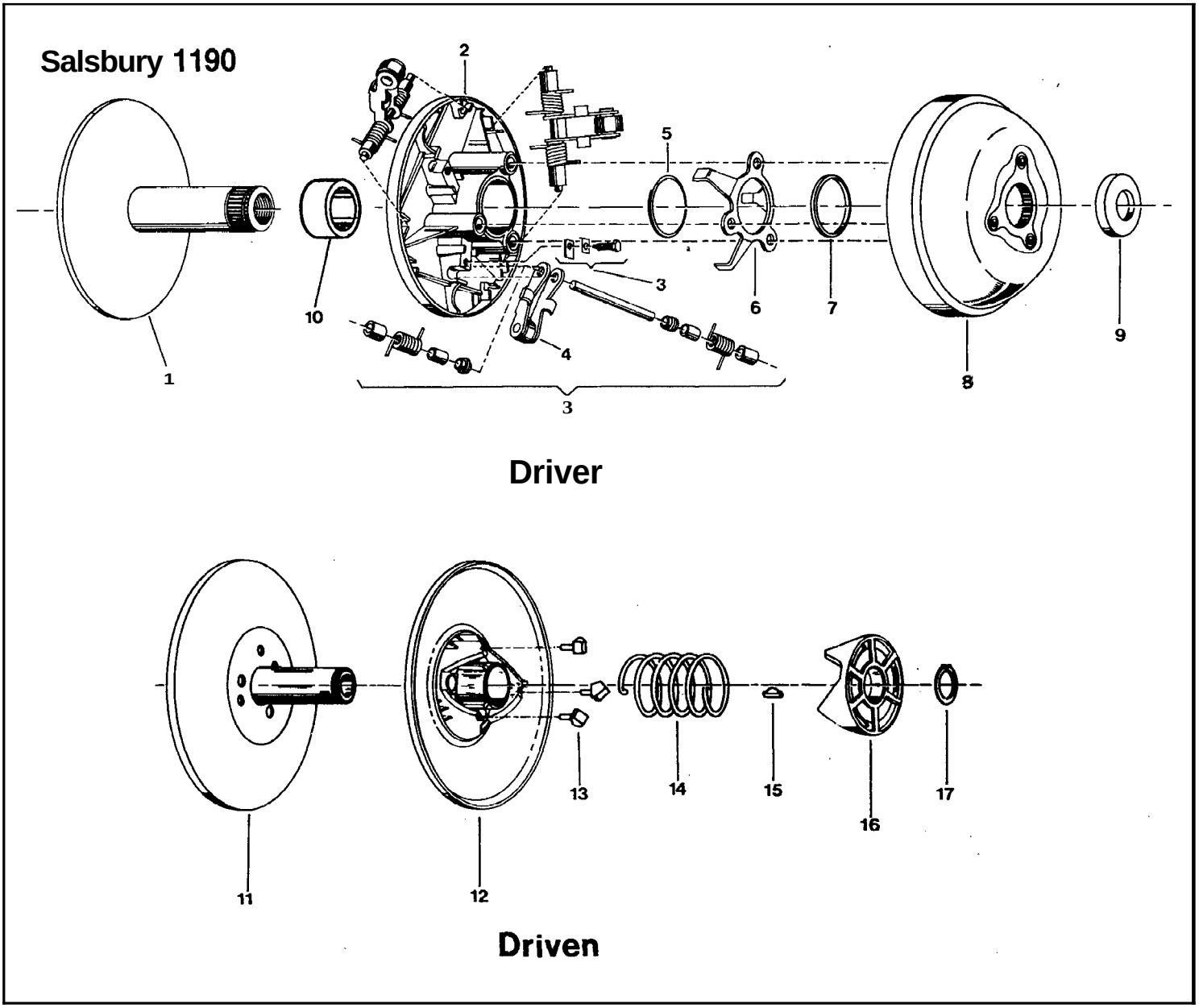

10.0 Clutches — Salsbury 1190 — (Kohler) from KB-3972 to KB-5483

ey Nc	Part No.	emark	Description	Qty.
	125-54 *a* 125-74	NA AC	DRIVER CLUTCH. (discontinued — Use Power Bloc Clutches, part #s 125-83/80), KB-3972 to KB-5483	
1	601031		FACE & HUB, fixed	1
2	602200	RO	FACE ASS'Y. **movable.** requires No 10; KB-3972 to KB-5483	1
3	690115	AS	KIT, Spring & Pin, set of three 3 x	1
4	690395	AS RO	KIT, Roller Arm. set of (3): KB-3972 to KB-5483.	3
			KIT, Roller Arm, **on** 125-74 **only.** KB-4259, from KB-4301	
5	703138		RING, Retaining	1
6	702836		RETRACTOR	1
7	703081		SPACER	1
8	600998		RAMP PLATE ASS'Y	1
9	703135		WASHER, Cup	1
10	704347		BEARING. **on** 125-74 only, KB-4259trom KB-4301 to KB-5483	1

ey No	Part No.	emark	Description	Qty.
	125-55 *a* 125-73	NA AC	DRIVEN CLUTCH, (discontinued — Use Power Bloc Driven Clutch, part No. 125-87 or replace Driver & Driven with #s 125-83/80; KB-3972 to KB-5483	
11	601140		FACE & HUB. fixed	1
12	601342		FACE ASS'Y, movable	1
13	703113		SLIPPER, Cam	3
14	703246		SPRING, yellow, on 12555 only, KB-3972 to K8-4258. KB-4260 to KB-4300	1
14	703969		SPRING, white, on 125-75 only, KB-4259. from KE-4301 to KB-5483	1
15	901687		KEY	1
16	703703		CAM, 32"	1
17	900009		RING. Retaining	1

11.0 Clutches — Power Bloc from K-5092, KB-5489, T-5498, TB-6817, HTB-6736 ,S,SB

Driver — 125-79
125-83
126-23
126-28

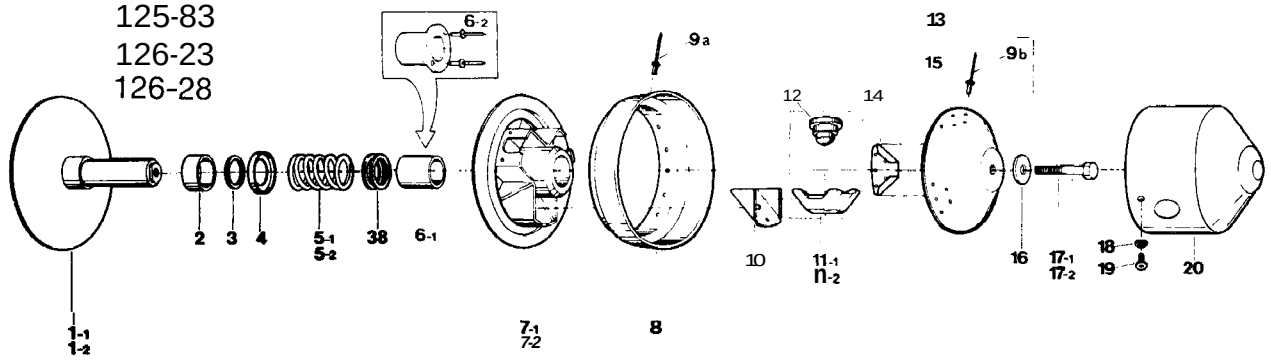

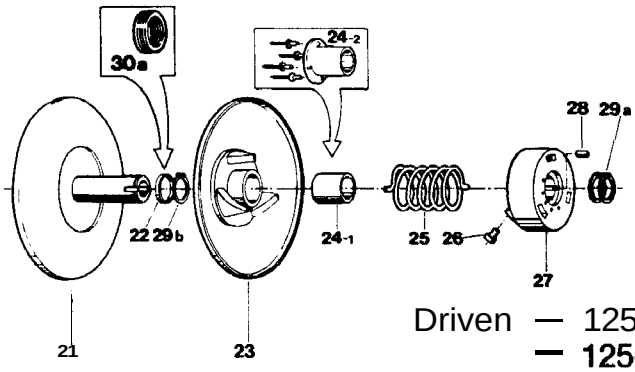

Driven — 125-80
— 125-87

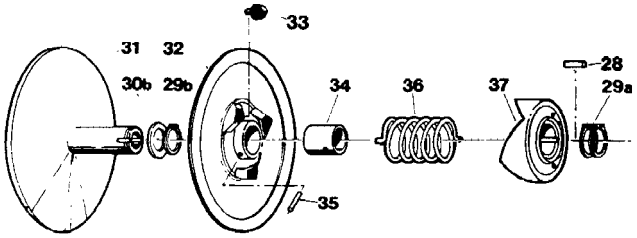

Driven — 126-24

11.0 Clutches — Power Bloc from K-5092, KB-5489, T-5498. TB-6817, HTB-6736 ,S,SB

ey No.	Part No.	emarks	Description	Qty
	12579		DRIVER CLUTCH, threaded bore; Incls Nos. 1-1, 2, 3, 4, 5-1, 6-1, 7-1, 8, 9a, 10, 11-1, 13, 16, 17-1; (used with #125-80 or 126-24 Driven Clutch only); K-5092 to K-5835, KB-5489 to KB-7445, T-5498 to T-5866, TB-6817 to TB-7236, HTB-6736 to HTB-7339, S-5759 to S-5871; replace with #126-23 if not available.	
	125-83		DRIVER CLUTCH, keyed bore Incl 1-2 & 17-2, otherwise same as #125-79; (used with X125-80 or 126-24 Driven Clutch only); replace with #126-28 if not available; KB-3972 to KB-5483	
	12623		DRIVER CLUTCH, threaded bore, Incls 1-1, 2, 3, 4, 5-2, 6-1, 7-2, 11-2, 13, 16, 17-1, 18, 19. 20; from K-5874, KB-7446, T-5872, TB-7448, HTB-7447, S-5873	
	126-28		DRIVER CLUTCH, keyed bore. Incl 1-2 & 17-2, otherwise same as #126-23; replaces #125-83; (used with #125-80 or 126-24 Driven Clutch only): KB-3972 to KB-5483	
1-1	A-152-13		FIXED PULLEY, threaded bore, (used on #125-79 & 126-23 Driver Clutches only).	1
1-2	A-153-13		FIXED PULLEY, keyed bore, (used on #125-83 and 126-28 Driver Clutches only)	1
2	X-28-104		IDLER BUSHING	1
3	X-31		BELT HEIGHT ADJUSTMENT SPACER	2
4	X-41		SPRING SHOULDER WASHER	1
5-1	K-5218304		SPRING, grey, 3-1/4" lg., use on #125-79 and #125-83 Clutches only.	1
5-2	X-5243212		SPRING. black, 2-3/4" lg., (use on #126-23 and 126-28 Driver Clutch)	1
6-1	X-6B1-T	RO	SLIDING TEFLON BUSHING	1
6-2		NA	SHOULDERED BUSHING, replace with No. 6-1	1
7-1	A-61		SLIDING PULLEY, Incl NO. 6-1; used on #125-79 & 125-83 Driver; uses NOS. a, 9a	1
7-2	X-601		SLIDING PULLEY. Incl No. 6-1: (used on #126-23 and 126-28 Driver Clutches). uses Nos. 18, 19. 20	1
a	A-6.G		STEEL GUARD, used on No. 7-1 only	1
9a	A-6-P		POP RIVET, steel, 1/8"	3
9b	A-6-P		POP RIVET, steel, 1/8"	5
10	A-6-S		STEEL SLIDE FACE	3
11-1	x-93		SLIDING WEIGHT SET, set of 3 blocks & weights 200 gram; used on #125-79 & 125-83 Driver Clutches	1
11-2	X-92-175-E		CENTRIFUGAL BLOCK & WEIGHT. replace all 3 blocks and weights. 175 gram do not mix with No 11-1; (used on #126-23 or 126-28 Driver Clutch)	3
12	X-82-175		CALIBRATION WEIGHT, 175 gram; replace all 3; used on 11-2 only; do not mix with old type No. 11-1	3
13	A-1150		STEEL CONE CUP ASS'Y. Incl. NOS. 9b, 14 & 15	

ey No	Part No.	emark	Description	Qty.
14	A-11-W		SMALL WING, steel	3
15	A-1150-C		STEEL CONE CAP — only	1
16	x-1250		FLATWASHER	1
17-1	X-1351		BOLT, 1/2-14 x 1-1/4", use with #125-79 or #126-23 Driver Clutches only	1
17-2	x-1342		BOLT, 7/16-20 x 3-1/4", special, (use on #125-83 or 126-28 Driver Clutch only)	1
18	X-20-1		SCREW, use on 7-2 only	3
19	X-20-5		LOCKWASHER, use on 7-2 only	3
20	x-20		STEEL GUARD, use on 7-2 only	1
	125-80		DRIVEN CLUTCH, Incls 21, 23, 24-1, 25, 26, 27, 28, 29a, 29b, 30a; to K-5835, KB-5489 to KB-7445, T-5498 to T-5866, TB-6817 to TB-7236, HTB-6736 to HTB-7339, S-5759 to S-5871;	
	125-87		DRIVEN CLUTCH, (replaces Salsbury 1190 Driven Clutch); same as #125-80 above, except No. 25 Spring is tensioned an extra 1/3 turn(120); replace with #126-24 Driven Clutch if not available	
	126-24		DRIVEN CLUTCH, Incls 28, 29a, 29b, 30b, 31, 32, 33, 34, 35, 36, 37; from K-5874, KB-7446, T-5872 TB-7448, HTB-7447. S-5873	
21	C-1100-AR		FIXED PULLEY	1
22	x-35	NA	SPACER RING, .170" thk., use NO. 30a	1
23	C-7-AR		SLIDING CAM PULLEY. Incl No 24 bushing	1
24-1	C-6	RO	BUSHING	1
24-2		NA	SHOULDERED BUSHING. Incl rivets; use 24-1	1
25	C-5-177		SPRING, grey. 3-7/8" lg.	1
26	C-4		CAM SLIDER SHOE, nylon	3
27	C-3		FIXED CAM	1
28	ASK-5	NO	SQUARE KEY. 1/4 x 1/4 x 3/4" lg.	1
29a	ASR-6	RO	SNAP RING, .05" thk.	2
29b	ASR-6	RO	SNAP RING, .05" thk.. as required	1
30a	ASA-1	RO	ADJUSTMENT SPACER, 1-1/2 x 1-7/8 x .050"	5
30b	ASA-1	RO	ADJUSTMENT SPACER, 1-1/2 x 1-7/8 x .050"	4
31	AFK-1-250		FIXED PULLEY	1
32	AMC-2-250		SLIDING CAM PULLEY	1
33	ANS-2-B		CAM SLIDER SHOE. black	3
34	AMB-2		BUSHING	1
35	CCP-2		ROLL PIN	1
36	ACS-3-188		SPRING, blue	1
37	AFC-4		FIXED CAM	
38	x-3-s		ADJUSTMENT SPACER. 1-3/8 x 1-7/8 x .050"	

12.0 Hydraulic Brake — Cooling System (KB Model)

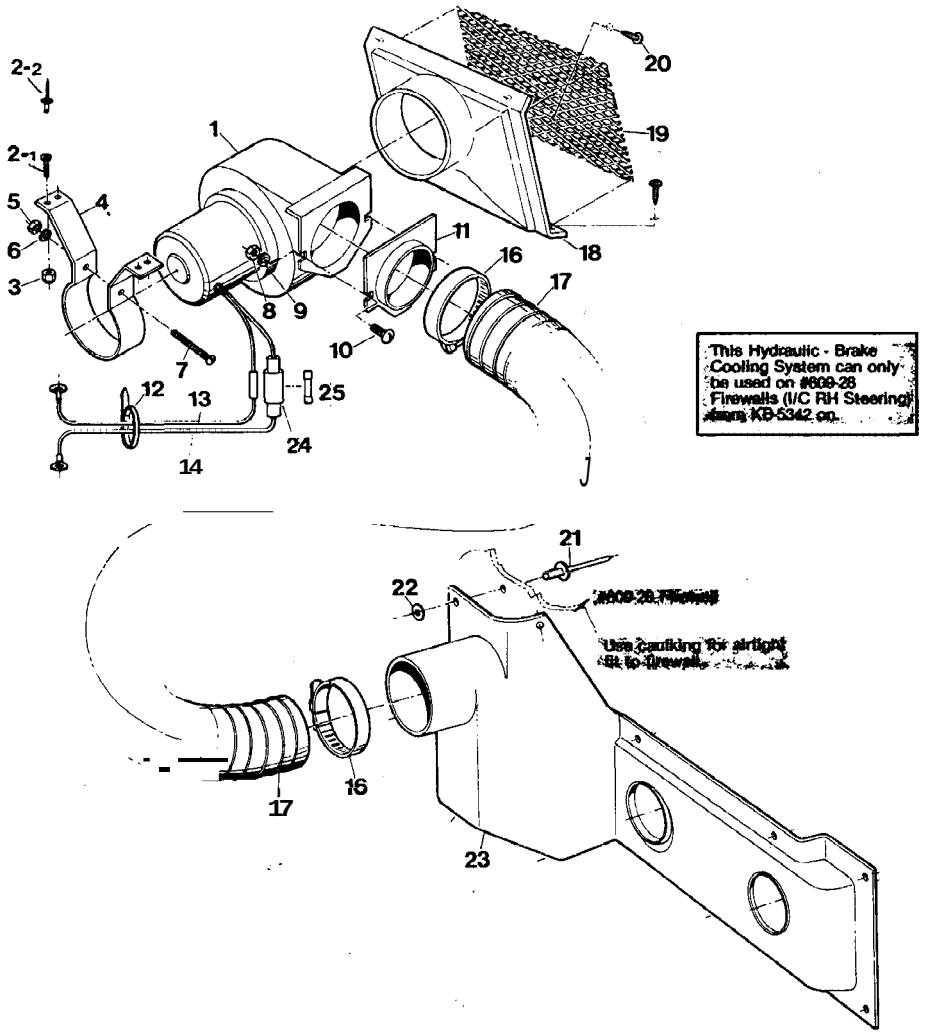

12.0 Hydraulic Brake — Cooling System

Key N	Part No.	Remarks	Description	Qty.
	667		HYDRAULIC-BRAKE COOLING SYSTEM KIT, Incl Nos. 1 to 23, production from KB 5586 avail. for 8 I/C's from KB-5342 on	
1	12591		BLOWER FAN, 12V, 8 Amp. max., 125-CFM, also avail. as kit #667 above	1
2-1	103-25		PAN HD PHILLIPS SCREW, #10-24 x ¾"	4
2-2	120-09		RIVET, 3/16 x 1", alum	4
3	117-10		NYLON LOCKNUT. # 1024	4
	125-92		ADAPTER & MOUNTING KIT, c/w fasteners, Incl 4-11	
4		AS	MOUNTING BRACKET, see #125-92 Kit above	1
5		AS	NUT #10-32	1
6		AS	LOCKWASHER, 3/16", Internal tooth	1
7		AS	SCREW, #10-32 x 2", Round Hd.	1
8		AS	NUT, ¼ - 20	2
9		AS	LOCKWASHER, ¼", Internal tooth	2
10		AS	SCREW, ¼ - 20 x ⅝, Round Hd.	2
11		AS	ADAPTOR. 3" dia see #125-92 Kit above	1

Key No.	Part No.	Remarks	Description	Qty
12	100-64		TIE-RAP	1
13	613-30		BLOWER FAN GROUND LEAD, see also-group (200 Electrical)	1
14	613-29		BLOWER FAN POWER LEAD, Incl Nos 24 & 25 see also group (200 Electrical)	1
16	125-35		GEAR CLAMP, 3⅝"dia	2
17	125-90		INTAKE HOSE, 3 x 24"	1
18	601-64		INTAKE FLANGE, plastic, state colour - Orange or Green	1
19	12593		SCREEN, Brake Cooling Air Intake, 6 x 7⅝"	1
20	103-48		SELF TAPPING SCREW, #10 x ⅝"	4
21	120-09		RIVET, 3/16 x 1", alum	10
22	120-05		SPACER, 3/16"	10
23	609-27		BRAKE COOLING AIR DUCT, Fiberglass - black	1
24	613-12		FUSE HOLDER. see No 14	
25	118-37		FUSE, 9 Amp. see No 14	

13.0 Brakes — Mechanical (T, TB, HT, HTB, S, SB Models)

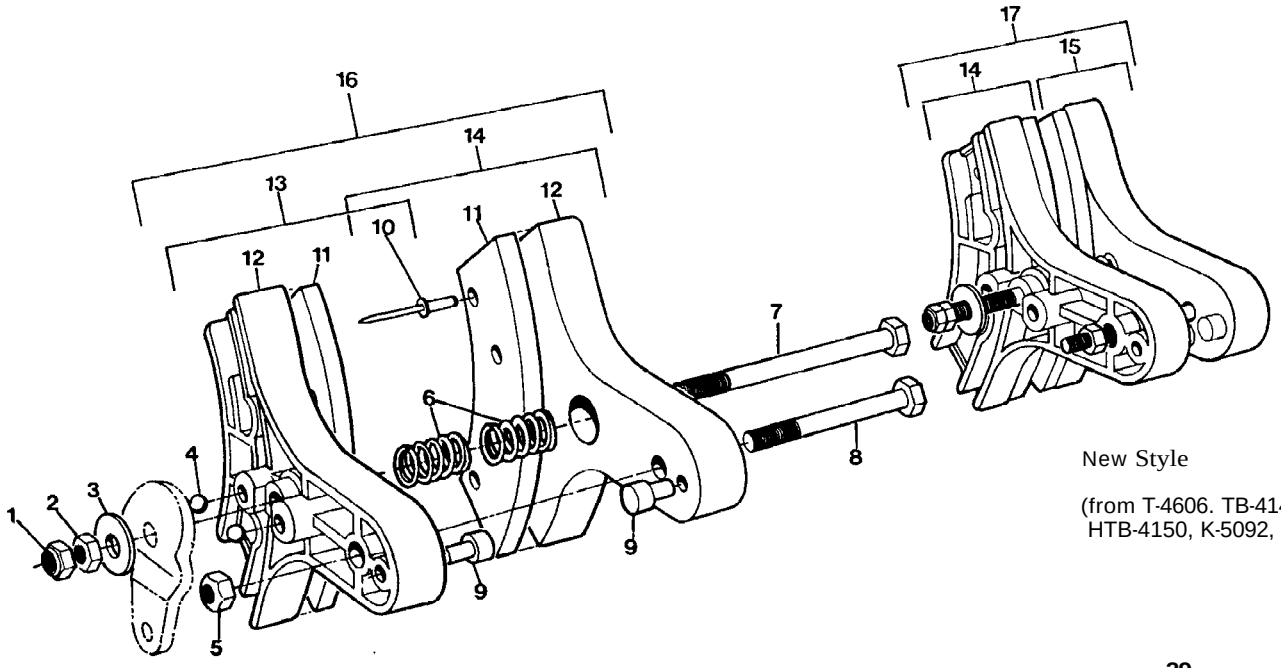

New Style

(from T-4606. TB-4146, HT-4612. HTB-4150, K-5092, **S-5759)**

Orientation of parts Key No.'s 1 to 5, 7 and 8 will be reversed of what is shown, for vehicles with Right Side Steering (from T-5117, TB-5690, HTB-5665, K-5092, **S-5759)**

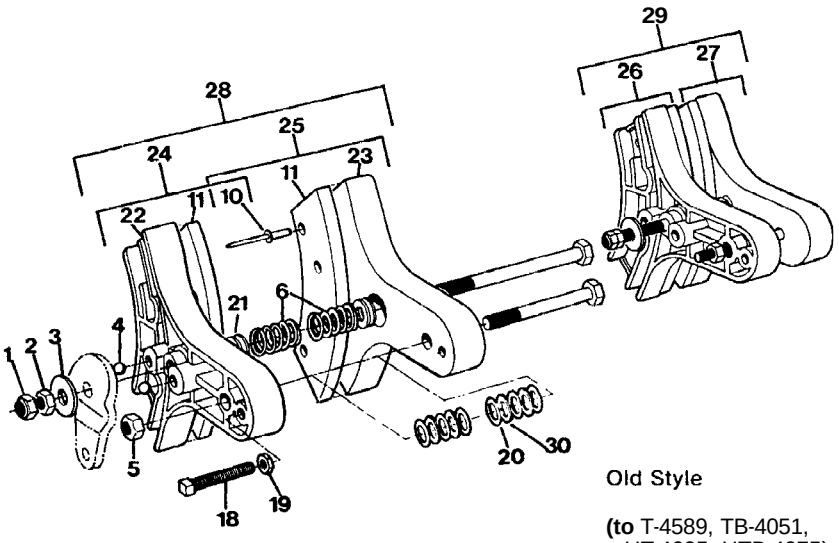

Old Style

(to T-4589, TB-4051, HT-4605, HTB-4075)

NOTE: Unleasotherwise stated, use S model parts on all SB vehicles

13.0 Brakes — Mechanical

Key No.	Part No.	Remarks	Description		Qty.
1	117-13	RO	CONE LOCKNUT, 5/16 - 24	2x	1
2	117-17		JAM NUT, 5/16 - 24	2x1	1
3	108.12		SAE WASHER, 5/16 x 1 x 1/16	2n	1
4	109-02		CARBON STEEL BALL, ¼ Dia.	2n	2
5	117.46		PHILIDAS LOCKNUT, 5/16 - 24	2x	1
6	100-10		COMPRESSION SPRING	2x	2
7	103-16	RO	HHCS.5116 - 24 x 3¼	2x	1
8	103-29		HHCS. 5/16 - 24 x 2¾	2x	1
9	610-21		PIVOT PIN, use 1 per Caliper	4x	1
10	120-11		RIVET No. 56, used in 13, 14, 15.	4x	4
11	100-56	AS	BRAKE PADS, set of 2, see 13, 14, 1	4x	1
12	100-54A	RR	BRAKE CALIPER, Incl. 9.	4x	1
13		AC	BRAKE CALIPER, left outer, trimmed, Incl. 10, 11, 12.		1
14		AC	BRAKE CALIPER, left or right inner, Incl. 10, 11, 12.		2
15		AC	BRAKE CALIPER, right outer, trimmed, Incl. 10, 11, 12.		1
16	100-72B	RO	LH BRAKE ASS'Y KIT Incl. 1, 2, 3, 4, 5, 6, 7, 8, 13, 14.		1
17	100-72A	RO	RH BRAKE ASS'Y KIT Incl. 1, 2, 3, 4, 5, 6, 7, 8, 14, 15.		1
18	103-30		SQ. HD. SCREW, ¼ - 20 x 2	2	1
19	117-12		JAM NUT. 1/4 - 20	2	1
20	108-13		BRAKE SPRING WASHER	2	6
21	108-14		SAE WASHER, 5/16, use in 28, 29 only	2	4
22		NA	BRAKE CALIPER, LH. use 12	2	1
23		NA	BRAKE CALIPER, RH. use 12	2	1
24		AC	BRAKE CALIPER ASS'Y. left outer, trimmed Incl. 10, 11, 22		1
25		AC	BRAKE CALIPER ASS'Y. left inner Incl. 10, 11.23.		1
26		AC	BRAKE CALIPER ASS'Y, right inner Incl. 10, 11, 22.		1
27		AC	BRAKE CALIPER ASS'Y. right outer. trimmed Incl. 10, 11, 23.		1
26		NA AC	LH BRAKE ASS'Y KIT, use 16,		1
29		NA AC	RH BRAKE ASS'Y KIT, use 17,		1
30	108-24		SAE WASHER, 5/16, use on 28, 29 only	2x	4

14.0 Brakes — Hydraulic (KB Model)

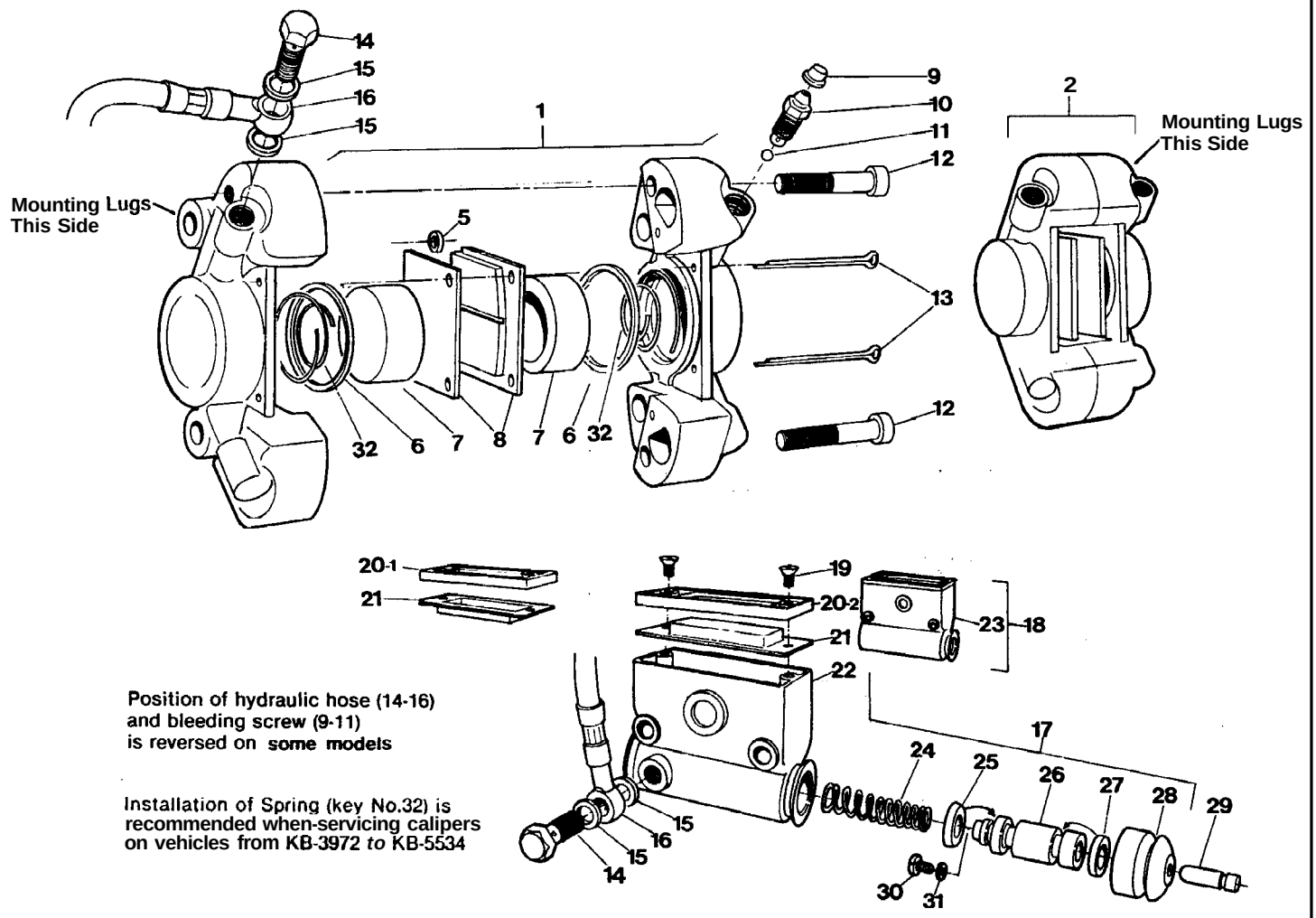

14.0 Brakes — Hydraulic

ey Nc	Part No.	Remark	Description		Qty
1	166-01		IYDRL. BRAKE CALIPER, Incl Nos. 5 to 13; mounting lugs on left Side of caliper; from KB-3972; Incl key NO. 32 from KB-5535		1
2	166-02		HYDRL. BRAKE CALIPER, Incl Nos. 5 to 13: mounting lugs on right side of caliper; from KB-3972: Incl key No. 32 from KB-5535		1
5		AS	RUBBER SEAL, 5 mm ID, use 161-01 Kit,	2x	1
6		AS	PISTON SEAL, 41 mm ID, use 16101 Kit,	2x	1
	161-01		CALIPER O-RING KIT. Incl. 5, 6, (1 caliper only)		
7	168-05		PISTON, 41 mm dia.	4x	1
8	170-01		BRAKE PAD SET	2x	2
9	168-20		RUBBER PLUG	2x	1
10	168-03		BLEEDING SCREW, M10 x 1	2x	1
11	168-04		CHECK BALL	2x	1
12	160-41		HEX SKT HD BOLT, M10 x 1.5 x 50	4x	1
13	168-06		COTTER PIN, 3 mm x 55 mm	4x	1
14	160-44		BANJO BOLT, M10 x 1 x 21	2x	1
15	160-01		COPPER WASHER, 1.5 x 11x 14 mm	8x	1
16	163-01		HYDRL. HOSE ASSY, 300 mm	2x	1
17	165-06		MASTER CYLINDER. Incl 19.28, (fluid inlet on left side of reservoir)		1

ey No	Parl No.	emark:	Description		ity.
18	165-05		MASTER CYLINDER. Incl 19 - 21, 23, 24 - 28 (fluid inlet on right side of reservoir)		1
19	160-42		SCREW C/S, M5 x .8 x 6	2x	2
20-1	168-08		COVER, Alum., KB-3972 to KB-5534	2x	1
20-2	168-13		COVER, Alum., modified. from KB-5535	2x	1
21	168-09		COVER, Rubber	2x	1
22		AA	HYDRAULIC RESERVOIR, Alum., see 17, (inlet on left side of reservoir)		1
23		AA	HYDRAULIC RESERVOIR, Alum. see 18, (inlet on right side of reservoir)		1
24	162-02	RO	RETURN SPRING, heavy duty	2x	1
25		AS	PRIMARY SEAL, 19 mm O.D., use 161-25 Kit	2x	1
26	168-10		PISTON, 19 mm Dia.	2x	1
27		AS	SECONDARY SEAL, 19 mm. O.D., use 161-25 Kit	2x	1
28		AS	BOOT, Rubber, use 161-25 Kit	2x	1
	161-25		MASTER CYLINDER O-RING KIT, Incl 25, 27, 28, (1 master cylinder only)		
29	16812		PLUNGER, from KB-3972 to KB-5534); see also No. 85. group (3.0 Power Pack. Kohler-8 I/C)	2x	1
30	168-25		SCREW, M5 (used only on some Master Cylinders)	2x	1
31	168-24		FLAT FIBRE WASHER (used only on some Master Cylinders)	2x	1
32	162-03	RR	TAPERED CALIPER SPRING production from KB-5535, (but use on all is recommended)	4x	1

15.0 Firewall

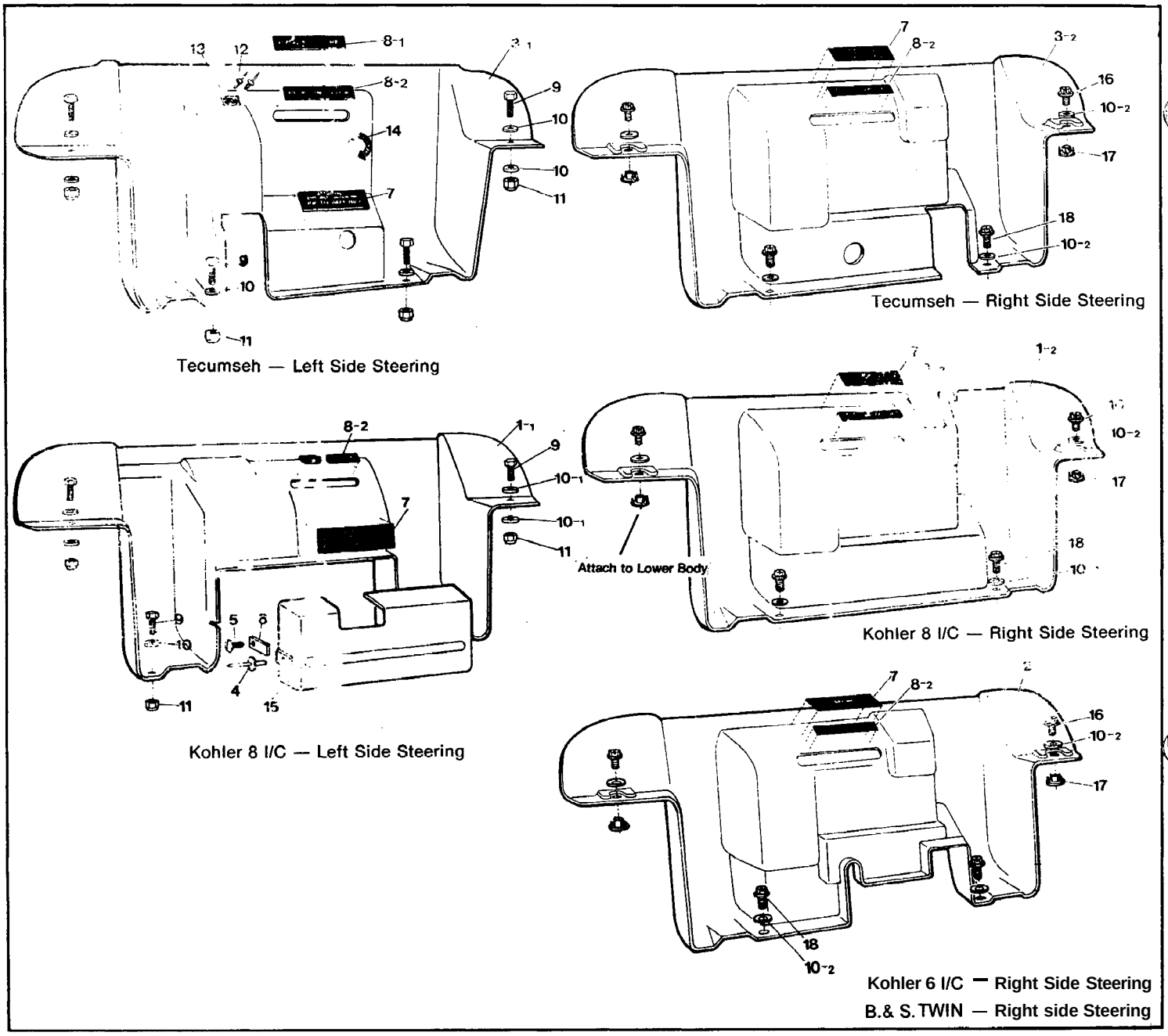

15.0 Firewall

Key No.	Part No.	Remarks	Description	Quantity		
				TEC	8 Koh 8 Twin	6 TWIN 6 I/C
1-1	609-23		FIREWALL, 8-I/C, (Left Side Steer) Incl 4 to 6 & 15; KB-3972 to KB-5337		1	
1-2	609-28		FIREWALL, 8-I/C, (Right Side Steer), from KB-5342		1	
2	609-31		FIREWALL, 6 I/C, 6 TWIN, (Right Side Steer), from K-5092, S-5759			1
3-1	609-01		FIREWALL, TEC 6 or 8, (Left Side Steer) to T-5091, TB-5471, HT-5066, HTB-5664	1		
3-2	609-32		FIREWALL, TEC 6 or 8, (Right Side Steer) from T-5117, TB-5472, HT-5067, HTB-5665	1		
4	120-13		RIVET, #66, KB-4076 to KB-5337		2	
5	103-94		SCREW, ¼ - 20 x ⅝, KB-3972 to KB-5337		2	
6	609-24	RO	ACCESS COVER BRKT, KB-3972 to KB-5337		2	
7	609-17		DRIVE TERRAIN DECAL	1	1	1
8-1	609-16		GEAR SHIFT DECAL, 1 speed only	1		
8-2	609-25		GEAR SHIFT DECAL, 2 speed only	1	1	1

Key No.	Part No.	Remarks	Description	Quantity		
				EC	8 Koh 8 Twin	6 TWIN 6 I/C
9	103-23		HHCS, ⅜-28 x ⅞*	1		
10-1	108-08		SAE WASHER, ¼"	6	6	
10-2	108-08		SAE WASHER, ¼"	4	4	4
11	117-01		NYLON LOCKNUT, ¼-28	4	4	
12	120-24		BLIND RIVET, 3/32 x ¼"	2		
13			SERIAL NUMBER PLATE, (Tec. left side steer only)	1		
14	609-02		IGNITION SWITCH DECAL, (Tec left side steer only)	1		
15		NA	ACCESS COVER, order 609-23 Firewall see 1-1, uses 4 to 6; KB-3972 to KB-5337		1	
16	103-11		HHCS, 1/4-20 x 1/2", Washer Hd.	2	2	2
17	117-44	AA	T-NUT, 1/4-20, use on lower body	2	2	2
18	10572		THREAD CUTTING SCREW, Hex Washer Hd., ¼ - 20 x ¾.	2	2	2

16.0 Fuel System & Seat Ass'y

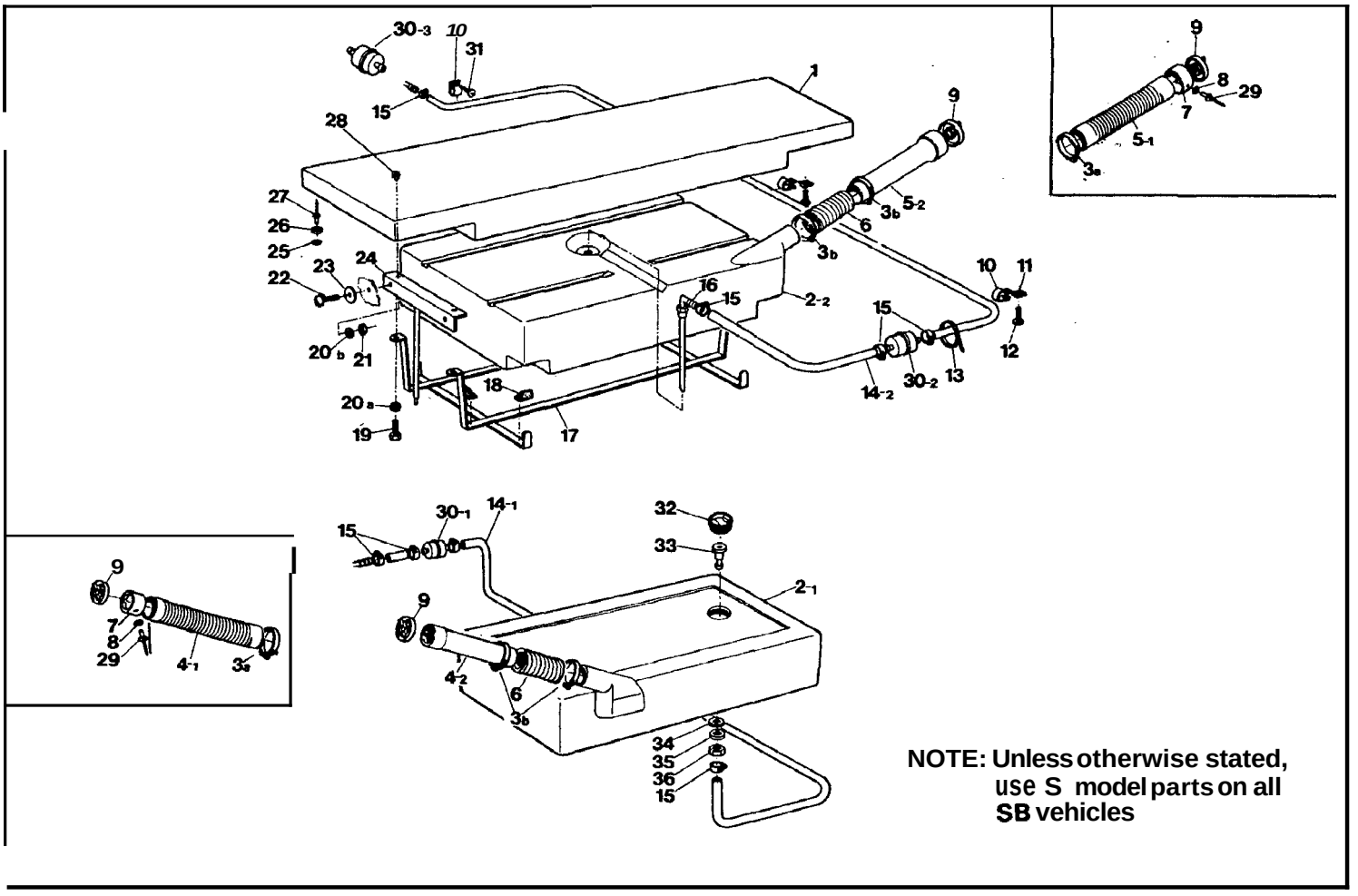

NOTE: Unless otherwise stated, use S model parts on all SB vehicles

16.0 Fuel System & Seat Ass'y

Key No	Part No.	Remarks	Description	Qty
1	608-13		BENCHSEAT .Incl key No. 28	1
2-1	608-23		FUEL TANK , Incl key NO. 32; 22.5 litre T-3732to T-4559, TB-1961 to TB-3904, to HT-4569, HTB-3970, KB-4011	1
2-2	608-24		FUEL TANK, 30 litre; from T-4585, TB-4012, HT-4570, HTB-4022, K-5092, KB-4076, S-5759	1
3a	100-12		GEAR CLAMP, 2¼"	1
3b	100-12		GEAR CLAMP. 2¼"	2
4-1		NA	FILLER HOSE, 2-1/4 OD x 2 ID x 20"; use key no. 4-2 and 6 below: to T-4559, TB-3904, HT-4569, HTB-3970, KB-4011	1
4-2	125-97	RO	FUEL NECK ASS'Y, 15-1/2" lg., requires key No. 6; to T-4559, TB-3904, HT-4569, HTB-3970, KB-4011	1
5-1		NA	FILLER HOSE, 2-1/4 OD x 2 ID x 14-1/2" lg; use key No. 5-2 and 6 below; from T-4585 to T-5167, TB-4012 to TB-5768, HT-4570 to HT-5066, HTB-4022 to HTB-5693, K-5092 to K-5166, KB-4076 to KB-5767	1
5-2	125-96	RO	FUEL NECK ASS'Y, 10" lg., requires key No. 6; production from T-5168, TB-5769, HT-5289, HTB-5778, K-5182, KB-5770, also replaces key 5-1	
6	125-94		FILLER HOSE, 51 mm ID x 5⅞" lg., production from T-5168, TB-5769, HTB-5778, K-5182, KB-5770, use use with key No. 4-2 or 5-2	1
7		NA	FUEL NECK, steel; use key NO. 5 2 & 6	1
8	120-05		SPACER, 3116"	1
9	100-29	RO	FUEL CAP, vented anti surge	1
10	125-48		HOSE CLIP, ½" ID from T-4585, TB-4012, HT-4570, HTB-4022, KB-4076	3
11	117-50		SPRING NUT, 01024, use 2 on 6 wheelers	3
12	103-25		PN HDSCREW, 10-24 x ¾, use 2 on 6 wheelers	3
13	100-64		TIE-RAP	1
14-1	608-06		FUEL HOSE, 5/16" x 60" to T-4559, TB-3904, HT-4569, HTB-3970, KB-4011	1
14-2	608-27		FUEL HOSE 114 x 94", from T-4585, TB-4012 HT-4570, HTB-4022. K-5092, KB-4076, S-5759	1
15	100-70		GEAR CLAMP, ½" HF8	4
16	608-28		FUEL PICKUP ASS'Y, from T-4585, TB-4012, HT-4570, HTB-4012, K-5092, KB-4076, S-5759	1
17	608-11		FUEL TANK CAGE, small, to T-3731 TB-1960	1
17	608-20		FUEL TANK CAGE, large, from T-3732, TB-1961 KB-2664, all HT, HTB , K S	1
18	702-06		CUSHION	8
19	103.97		HHCS, ¼ - 20 x 1¼"	4
20a	108-03		LOCKWASHER. ¼"	4
20b	108-03		LOCKWASHER. ¼"	4
21	117-20		HEX NUT, ¼ - 20" may be welded to 24	4
22	103-73	RO	SCREW, 114 - 20 x 3/4"	4
23	108-01		FENDER WASHER, 9/32 x 1-3/16 x .031	4
24	608-09		SEAT BRACKET	2
25	120-19		SPACER ⅛"	4
26	701-09	NA	MALE SNAP DOME	4
27	120-01		RIVET #48	4
28	117-44		T-NUT, ¼ - 20, see 1	4
29	120-13		RIVET, Alum #66	2
30-1	100-67		FUEL FILTER, 5/16" , G-12 to T-4559, TB-3904, HT-4569, HTB-3970, KB-4011	1
30-2	125-64		FUEL FILTER, 1/4", G-1, from T-4585, TB-4012, HT-4570 HTB-4012. K-5092, KB-4076.	1
30-3	125-64		SCREW FITTING, 1/4-G1, KB-5585 only, from S-5759	1
31	103-48			1
32		NA	BUNG , see key NO. 2 1	1
33	201-42		FUEL TANK FITTING, 5/16", W-20N to T-4559, TB-3904, HT-4569, HTB-3970, KB-4011	1
34	125-09		NEOPRENE WASHER, ½ x 1 x ⅛" to T-4559, TB-3904, HT-4569, HTB-3970, KB-4011	1
35	108-35		SAE WASHER, ½" ID to T-4559, TB-3904, HT-4569, HTB-3970, KB-4011	1
36	11745		JAM NUT, ½ - 20	1

17.0 Vehicle Bodies

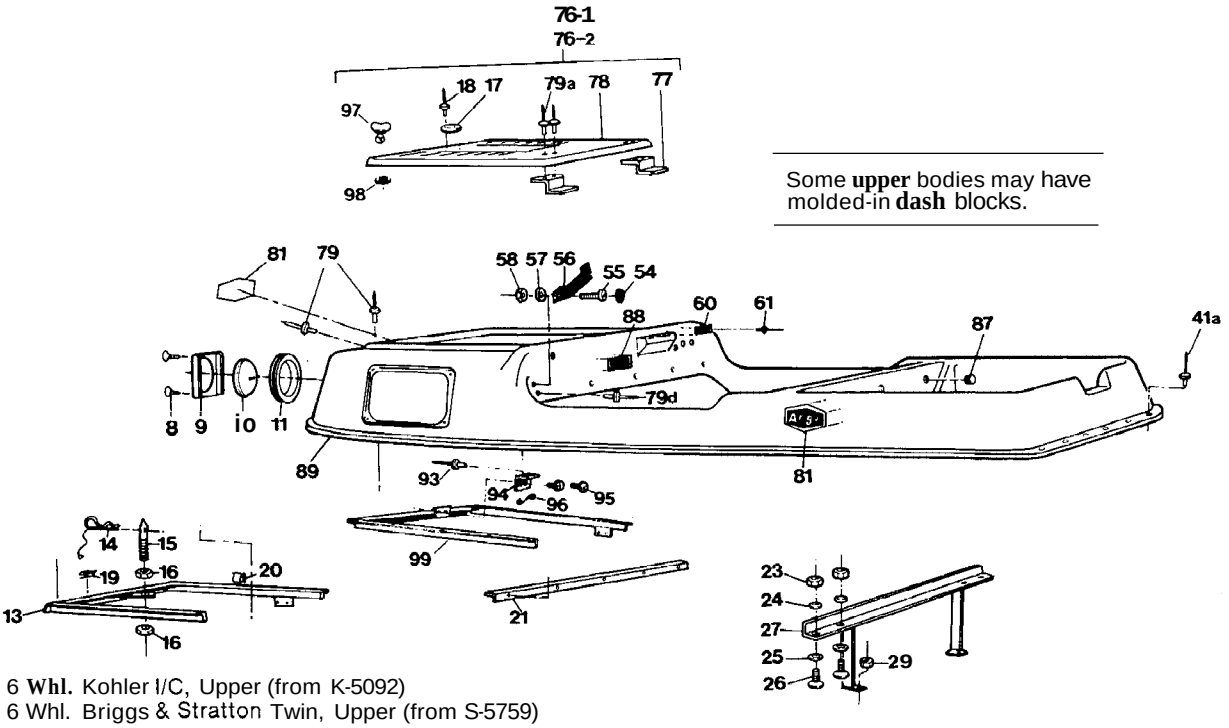

Some **upper** bodies may have molded-in **dash** blocks.

6 **Whl.** Kohler I/C, Upper (from K-5092)
6 Whl. Briggs & Stratton Twin, Upper (from S-5759)

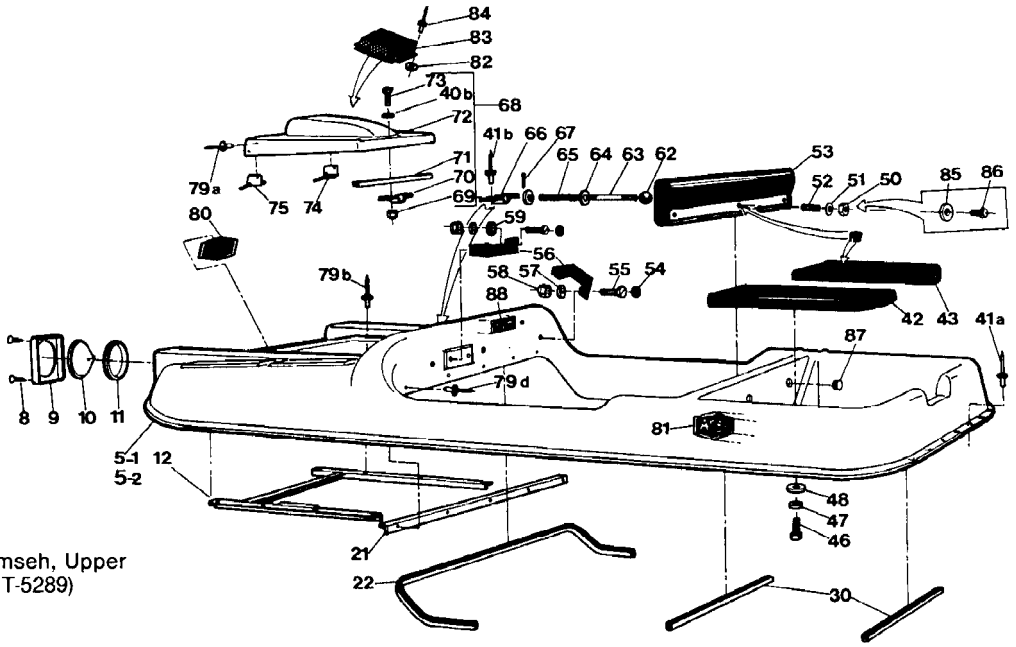

6 Whl. Tecumseh, Upper
(to T-5472, HT-5289)

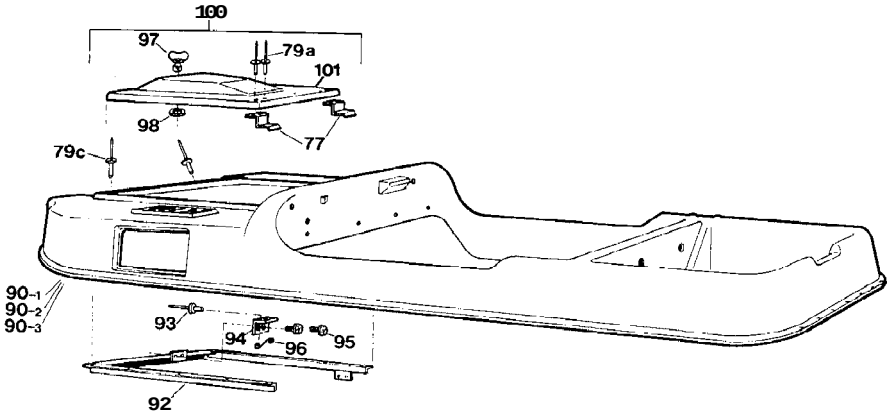

6 Whl. Tecumseh, Upper
(from T-5498)

17.0 Vehicle Bodies

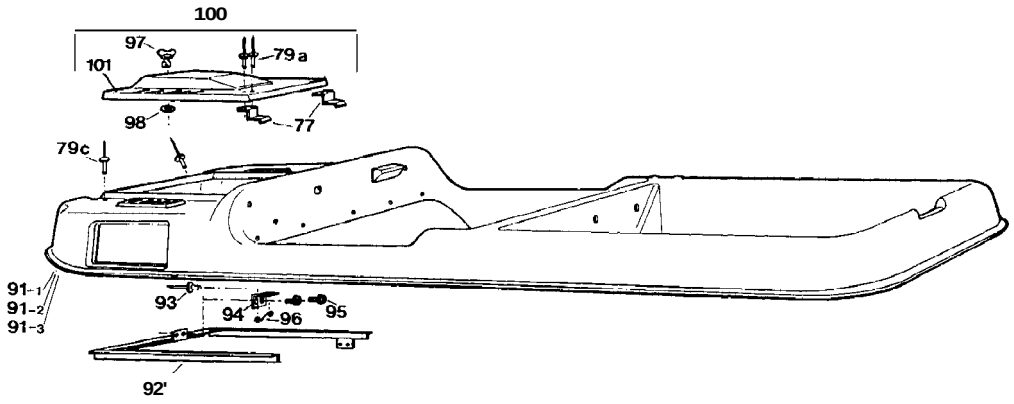

8 Whl. Tecurnseh, Upper
(from TB-6817, HTB-6736)

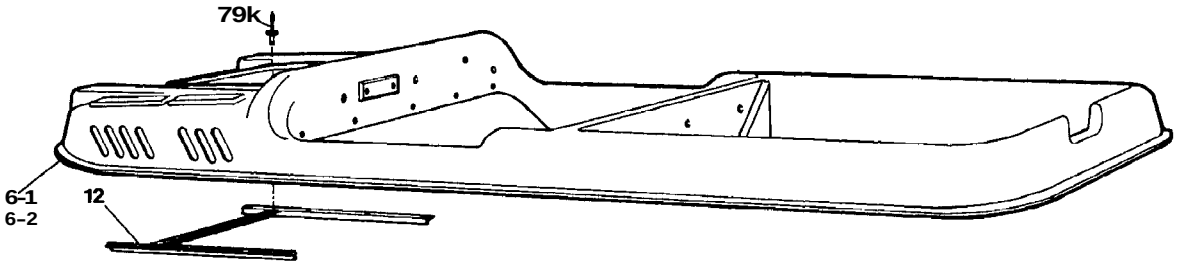

8 Whl. Tecurnseh, Upper **-see 6 wheel illustration for**
(to TB-6544, HTB-6632) **components except seats**

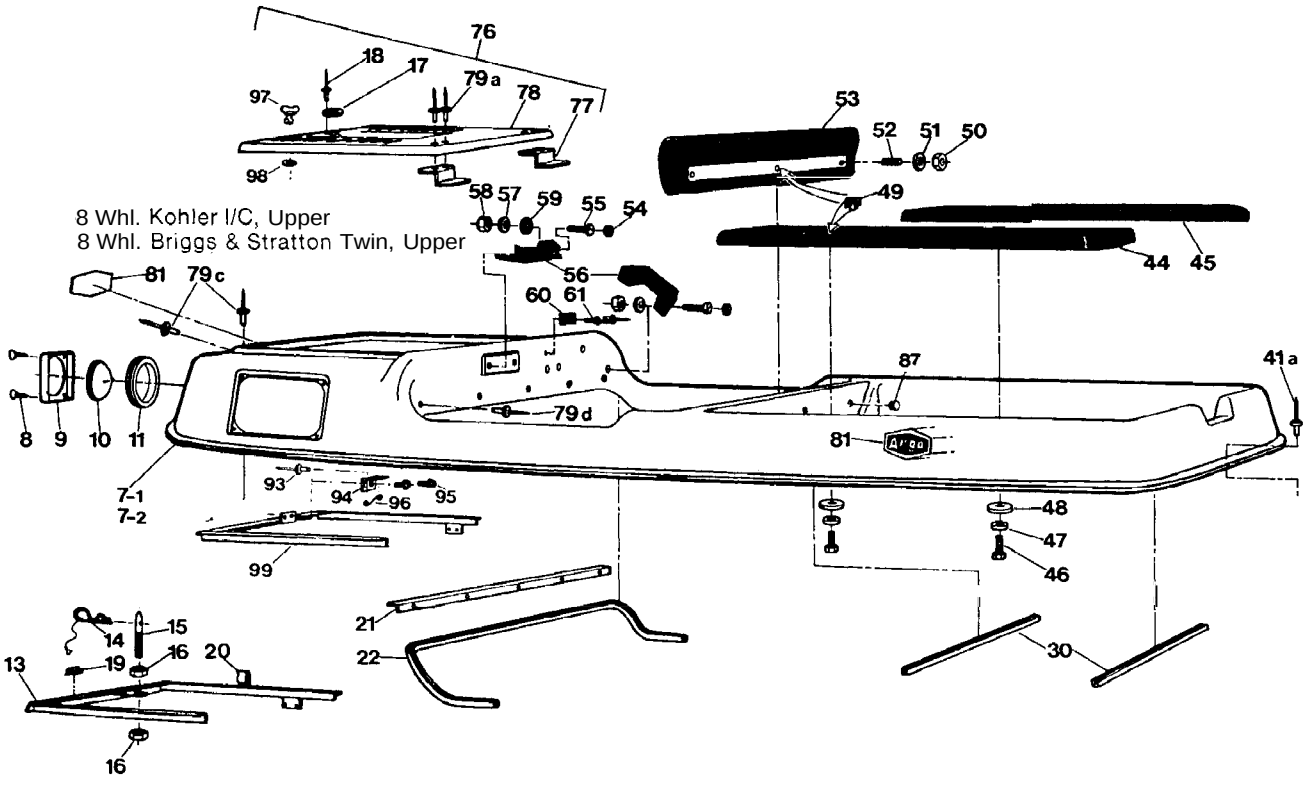

8 Whl. Kohler I/C, Upper
8 Whl. Briggs & Stratton Twin, Upper

17.0 Vehicle Bodies

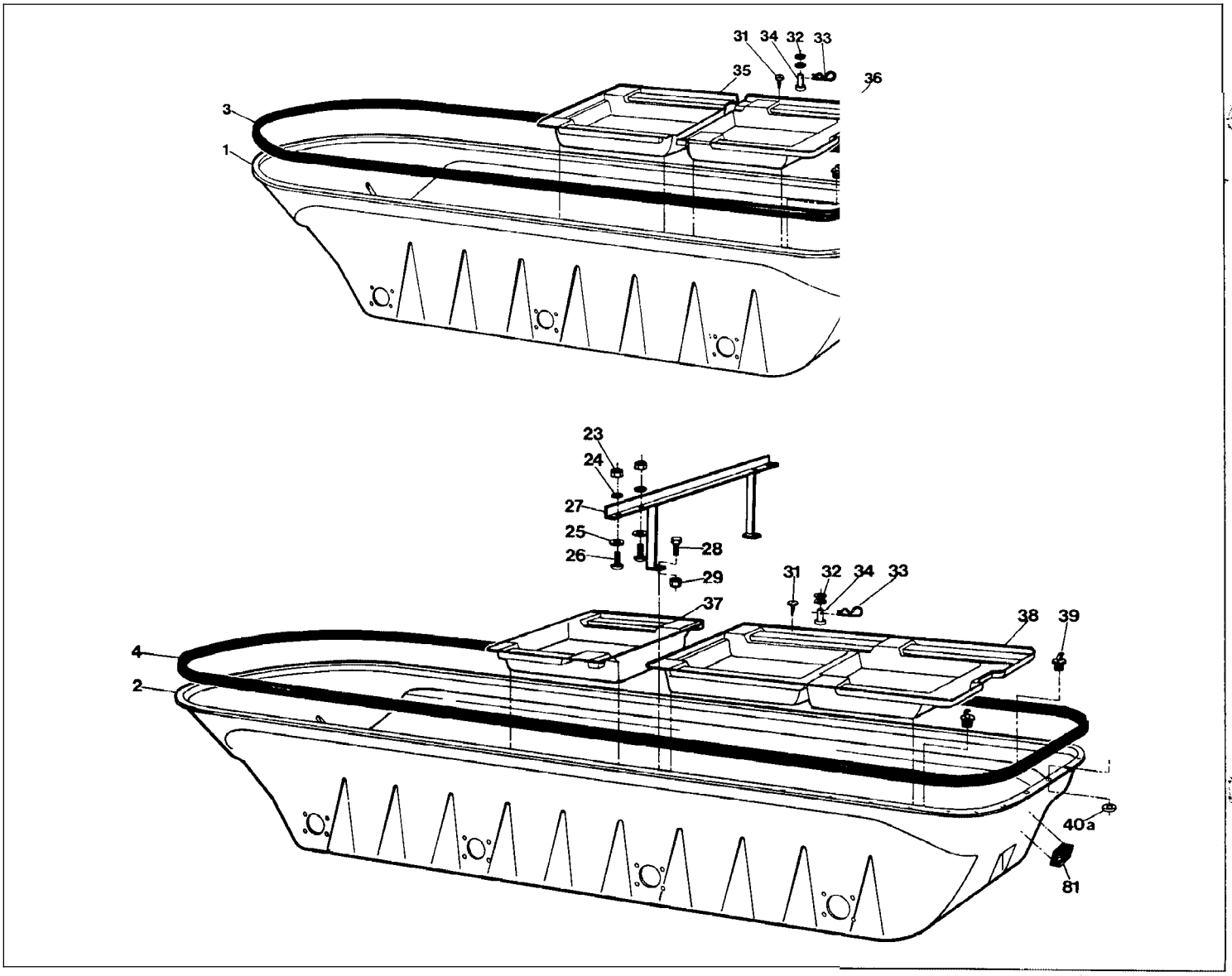

17.0 Vehicle Bodies

Key No	Part No.	Remarks	Description	Quantity			
				6Tec	8Tec	8 Koh 8Twin	6 Koh 6Twin
1	603-37		LOWER BODY, 6 WHL, 1⅛" axle, Specify Colour	1			1
2	803-09		LOWER BODY, 8 WHL, 1¼" axle, Specify Colour		1	1	
3	601-05		VINYL BUMPER, 6 WHL	1			1
4	801-05		VINYL BUMPER, 8 WHL		1	1	
5-1		NA	UPPER BODY, 6 WHL. TEC., (Left Side Steer), (discontinued. use key No. 90-1), special order only, specify colour; to T-5091, HT-5066				
5-2		NA	UPPER BODY, 6 WHL. TEC., (Right Side Steer), (discontinued - use key No. 90-2), special order only, specify colour; from T.5117 to T 5472, HT 5289				
6-1		NA	UPPER BODY, 8 WHL. TEC., (Left Side Steer), (discontinued - use key No. 91-1), special order only, specify colour; to TB-5471, HTB-5664				
6-2		NA	UPPER BODY, 8 WHL. TEC., (Right Side Steer), (discontinued - use key No. 91-2), special order only, specify colour; from TB-5172 to TB-6544, HTB-5665 to HTB-6632				
7-1	801-14		UPPER BODY, 8 WHL. KOH. (Left Side Steer), Incl No 78, special order only, specify colour; to KB-5336			1	
7-2	801-17		UPPER BODY, 8 WHL. KOH. (Right Side Steer). Incl No. 78, specify colour; from KB-5342			1	
			"See key No.s 89, 90 and 91 for other upper bodies"				
8	103-24		OVAL HD PHILIPS SCREW, #6 x 1	8	8	8	8
9	601-21		HEADLIGHTRIM	2	2	2	2
10	100-32		HEADLAMP	2	2	2	2
11	601-16		HEADLIGHTMOULDING, Rubber	2	2	2	2
12	601-40		HOOD SUPPORT ASS'Y . TEC., to T-5472, TB-6544. HT-5289 HTB-6632	1	1		
13	601-53		HOOD SUPPORT ASS'Y. I/C, to K-5589, KB-6894			1	1
	602-17		HOOD LATCH KIT. I/C, Incl 14 to 18, to K-5589. KB-6894			1	1
14		AS	LATCHCLIP AND WIRE			1	1
15		AS	HOODLATCHPIN, V2-20x4"			1	1
16		AS	HEX NUT, ½ - 20			2	2
17		AS	WASHER, ½ ID, 2½ OD			1	1
18	120-11		RIVET #56			4	4
19	125-46		CABLE CLIP, .060 - .089 grip			2	2

17.0 Vehicle Bodies

Key No.	Part No.	Remark	Description	Quantity			
				6Tec	8Tec	8 Koh 8Twin	6 Koh 6Twin
20	125-47		CABLE CLIP, .115 - .135 grip				
21	601-25		DASH BRACE ANGLE, 26'	1	1		
22	601-08		VINYL TRIM FRONT, 84"	1	1		
23	11703		HEX NUT, 5/16 - 18	4	4		
24	108-05		LOCKWASHER. 5/16	4	4		
25	108-26		PLATEWASHER. ⅜	4	4		
26	103-13		CARRIAGE BOLT, 5/16 - 18 x 1	4	4		
27	803-11		BODY SUPPORT	1	1		
28	103-09		HHCS, ¼ - 28 x ¾ welded to frame on some models		2		
29	11701		NYLON LOCKNUT, ¼ - 28	2	2		
30	601-09		VINYL TRIM REAR, 28"	2	2		
31	103-48		SELF TAP SCREW, #10 x ⅜ to T-4306, TB-3383, HT-4294, HTB-3495	4	6		
32	100-09		SPRING CLIP FASTENER, T-4307 to T-4611 TB-3384 to TB-4149, HT-4295 to T-4634 HTB-3496 to HTB-4160, KB-3972 to KB-4145	8	12		
33	100-16		CLEVIS PIN CLIP, from T-4307, TB-3384, HT-4295, HTB-3496, KB-3972 approx.	4	6		
34	104-04		CLEVIS PIN, 5/16 x ¾, from T-4307, TB-3384, HT-4295, HTB-3496, KB-3972 approx. (may be welded to frame.)	4	6		
35	603-02		FRONT FLOOR PAN, 6 WHL	1			
36	603-03		REAR FLOOR PAN, 6 WHL	1			
37	803-02		FRONT FLOOR PAN, 8 WHL		1		
38	803-03		REAR FLOOR PAN, 8 WHL		1		
39	100-18		DRAIN PLUG	2	2		
40a	120-05		SPACER, 3/16.	46	51	51	46
40b	120-05		SPACER, 3/16"	4	4		
41a	120-09		RIVET, 3/16 x 1"	46	51	51	46
41b	12009		RIVET. 3/16 x 1"	2	2		
42	60103		LH REAR SEAT, T, HT, K	1			
43	60102		RH REAR SEAT, T, HT. K	1			
44	801-03		LH REAR SEAT, TB, HTB, KB		1		
45	80102		RH REAR SEAT, TB, HTB, KB		1		
46	103-08		HHCS, ¼ - 20 x 1"	2	4		
47	108-08		SAE WASHER, ¼"	2	4		
48	603-15		PLASTIC WASHER, Specify Colour	2	4		
49	117-44		T-NUT, ¼ - 20	5	7		
50	117-20		HEX NUT, ¼ - 20 to T-5041	3	3		
51	108-17		INT. TOOTH LOCKWASHER. ¼" HT-5034 TB-5471	3	3		
52	10339		SOCKET SET SCREW, ¼ - 20 x 1" HTB-5488 KB-5495	3	3		
53	601-27		BACK PAD, 8 x 42½"	1	1		
54		AA	PLUG CAP, see #56				
55-1	103-86		SCREW, #8 - 32 x ¾, use with 58-1	4	4		
55-2	103-25		SCREW, #10 - 24 x ¾, use with 58-2	2	2		
56	125-41		DASH HANDLE, Incl 54, (also used as steering dash bloc on some models)	1	1		
57	120-05		SAE WASHER, 3/16	2	2		
58-1	117-43		NYLON LOCKNUT, #8 - 32	4	4		
58-2	117-10		NYLON LOCKNUT, #10 - 24	2	2		
59	200-24	NA	RUBBER SPACER, T-3756 to T-3959 TB-2047 to TB-2569	2	2		
60		NA	SERIAL NUMBER PLATE,				
61	12024		BLIND RIVET, 3/32 x ¼"	2	2		
62	601-12		BALL KNOB, plastic	1	1		
63	601-10		HOOD RELEASE ROD	1	1		
64	108-24		SAE WASHER, 5/16"	2	2		
65	100-27		SPRING, hood rod	1	1		
66	601-11		HOOD RELEASE GUIDE	1	1		
67	100-03		COTTER PIN, 3/32 x ¾"	1	1		
68	602-14		HOOD ASS'Y. TEC.. available in black fiberglass only; Incl key No.s 40-b, 69 to 75, 79a; to T-5463, TB-6544, HT-5289, HTB-6632	1	1		
69	117-10		NYLON LOCKNUT, #10 - 24	4	4		
70	60204		HOOD HINGE CATCH	1	1		
71	602-16	RO	HOOD CATCH SUPPORT CHANNEL	1	1		
72		AA	HOOD, TEC. 4 cycle, see 68	1	1		
73	103-31		MS, #10 - 24 x 1¼ to T-5472	4	4		
74	602-11		RH HOOD BRACKET HT-5289 TB-6544	1	1		
75	602-12		LH HOOD BRACKET HTB-6632	1	1		
76-1	602-18		HOOD ASS'Y. I/C, Incl 17. 18. 77 to 79a to K-5589. KB-6894			1	1
76-2	602 22		HOOD ASS'Y, I/C, Incl 77, 78, 79a. 97, 98, from K-5590, KB-6909			1	1
78			HOOD. I/C. plastic only			1	1
79a	120-13		RIVET. #66			4	4
79b	120-13		RIVET, #66	10	10		
79c	120-13		RIVET, #66			12	12
79d	12013		RIVET, #66	5	5	5	5
80	601-13		ODG DECAL	1	1		
81	601-14		ARGO DECAL	2	2	2	2
81	601-4		ARGO NAME PLATE, plastic	2	2	2	2
82	12019		SPACER, ⅛, to T-3749, TB-1976	8	8		
83	602-10		HOOD SCREEN, 6⅝ x 7¾, to T-3749, TB-1976	1	1		
84	120-01		RIVET, #48, to T-3749, TB-1976	a	8		
a5	108-01		FENDER WASHER 9/32" ID from T-5041 HT-5035	3	3	3	3
86	103-72		HEX HD, SCREW, ¼ - 20 x ¾ HTB-5517 K-5092	3	3	3	3
87	125-45		GREY PLUG KB-5496	3	3	3	3
88	601-60		"IMPORTANT" DECAL	1	1	1	1
89	601-73		UPPER BODY. 6 WHL I/C & TWIN, (Right Side Steer), Incl No. 78, from K-5092, 55759				1
90-1	601-77	RO	UPPER BODY. 6 WHL. TEC. (Left Side Steer). Incl NO. 101, replaces key NO. 5-1; special order only; to T-5091, HT-5066	1			
90-2	601-79	RO	UPPER BODY. 6 WHL TEC.. (Right Side Steer), Incl No. 101, replaces No. 52; special order only; T-5117 to T-5472, to HT-5289	1			
90-3	601-76		UPPER BODY, 6 WHL. TEC.. (Right Side Steer), Incl No. 101, from T-5498	1			
91-1	801 74	RO	UPPER BODY, 8 WHL TEC., (Left Side Steer), Incl No. 101, replaces key No. 6-1; special order only; to TB-5471, HTB-5664		1		
91-2	801-26	RO	UPPER BODY, 8 WHL. TEC., (Right Side Steer), Incl No. 101, replaces ref# 6-2; special order only; from TB-5690 to TB-6544, HTB-5665 to HTB-6632		1		
91-3	801-23		UPPER BODY, 8 WHL. TEC.. (Right Side Steer), Incl No. 101 from TB-6817, HTB-6736				
92	601-67		HOOD SUPPORT ASS'Y. TEC. from T-5498, TB-6817 HTB-6736	1	1		
93	120-15		RIVET. t45	2	2		
94	6018 9		SPRING PLATE, from T-5498 TB-6817, HTB-6736, K-5590 KB-6909	1	1		
95	103-70		THREAD CUTTING SCREW, 114 - 20 x 112	2	2	2	2
96	126-11		SPRING, from T-5498. TB-6817 HTB-6736, K-5590. KB-6909	1	1	1	1
97	126-10		WING STUD, from T-5498, TB-6817, HTB-6736, K 5590. KB-6909	1	1	1	1
98	126-09		GROMMET, alum.	1	1	1	1
99	601-83		HOOD SUPPORT ASS'Y. I/C, from K-5590, KB-6909			1	1
100	602-21		HOOD ASSY. TEC., Incl Nos. 77, 79a. 97, 98, 101; use on Nos 90 & 91	1	1		
101		NA	HOOD. TEC.. plastic only, see 90. 91 & 100				

18.0 Frames

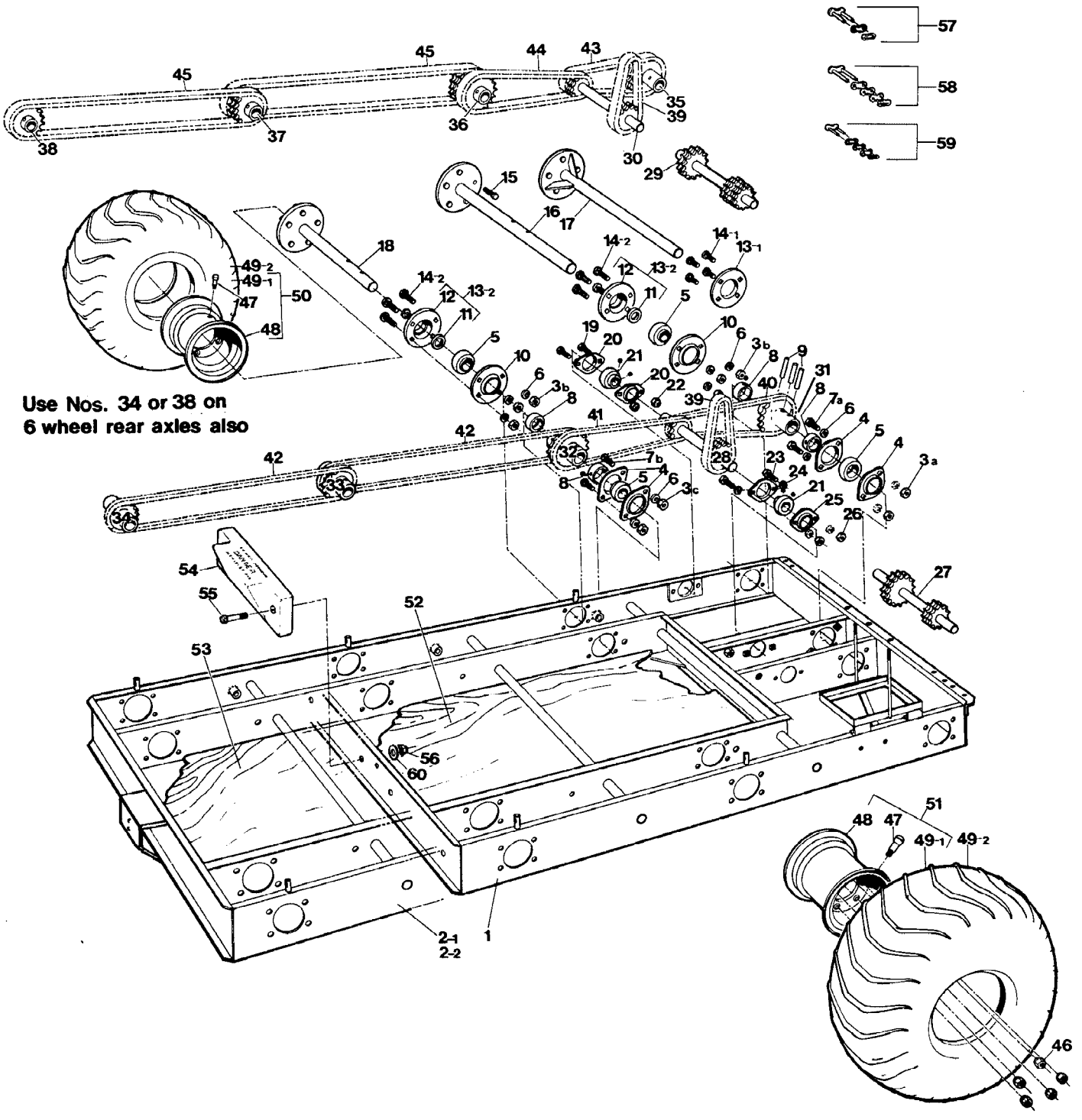

18.0 Frames

Key No.	Part No.	Remarks	Description	Quantity 6 whl.	Quantity 8 whl.
1	60480	RO	FRAME 6 WHL, TEC requires 52	1	
1	604-70		FRAME 6 WHL. I/C & TWIN, K-5092, S-5759	1	
2	804-40	RO	FRAME 8 WHL. I/C, KB-3972 to KB-7146		1
2	804-19		FRAME 8 WHL. I/C, from KB-7147 on		1
3a	117.15		HEX NUT, 3/8-16	4	4
3b	117-15		HEX NUT, 3/8 - 16,	24	32
3c	117-15		HEX NUT, 3/8 - 16,	8	12
4	101-13		INNER BRG FLNG. 1 1/4"	12	16
5	101.29		BEARING, 1¼", less flange, Incl 8	12	16
6	108-06		LOCKWASHER, 3/8	36	48
7a	103-89		CARRIAGE BOLT, 3/8 - 16 x 3/4, to T-4508, TB-3834, HT-4516, HTB-3882	4	4
7a	103-17		HHCS, 3/8 - 16x 1, from T-4509, TB-3835 HT-4517, HTB-3883, KB-3972.	4	4
7b	103-89		CARRIAGE BOLT, 3/8 - 16 x 3/4"	8	12
8		AA	ECCENTRIC LOCKING COLLAR, see 5		
9	111-05		SPIROL PINS, 5/16 x 2½, to T-4938, TB-4992, HT-4826, HTB-4938, KB-5046	12	16
9	11145		SPIROL PINS, 5/16 x 2½, from T-4939, TB-5349, HT-4827. HTB-4939, K-5092, KB-5047	14	18
10	605-63		OUTER BEARING FLANGE, 1¼"	6	8
11	10207		GREASE SEAL, 1¼", see 13-2	6	8
12		NA	GREASABLE OUTER FLNG. 1¼", see 132	6	8
131	605-63		OUTER BEARING FLNG, 1¼" to T-4038, TB-2782, replace with 13-2	6	8
132	605-68	RO	GREASABLE OUTR FLNG ASS'Y 1¼", Incl 11, 12. from T-4039, TB-2781, KB-3972, all HT. HTB	6	8
141	103-88		CARRIAGE BOLT, 3/8 - 16x 1", to T-4038, TB-2782	24	32
142	103-36		CARRIAGE BOLT, 3/8 - 16 x 1½, from T-4039, TB-2781, KB-3972, all HT, HTB	24	32
15	103-80		WHEEL STUD, 7/16-20 NF x 1⅛", see 16, 17, 18.	30	40
16		NA	FRONT AXLE SHFT ASS'Y. 1⅝". use 17	2	2
17	60575	RO	FRONT AXLE SHAFT ASS'Y, Gusseted, 1-1/4" all models, Incl key No. 15	2	2
18	60572		MID REAR AXLE SHFT ASS'Y, 1¼" Incl 15.	4	6
19	103-46		HHCS, 5/16 - 24 x 1	4	4
20	101-14		FLANGETTE, 2 Hole, 1", trimmed	4	4
21	101-30		BEARING, 1", less flange, set screw type.	4	4
22	117-04		NYLON LOCKNUT, 5/16-24	4	4
23	103-12		CARRIAGE BOLT, 5/16 - 18 x ¾, to T-4508, TB-3834, HT-4516, HTB-3882	4	4
23	103-06		HHCS, 5/16 - 18x 1, from T-4509, TB-3835, HT-4517, HTB-3883, KB-3972, K	4	4
24	108-05		LOCKWASHER, 5/16	4	4
25	101-12		FLANGETTE, 2 Hole, 1"	4	4
26	11743		HEX NUT, 5/16 - 18, to T-4508, TB-3834, HT-4516, HTB-3882	4	4
27	605-61		RH IDLER ASS'Y, S50 - 1 x 13T/S40 - 2 x 24T to TB-3904, all T	1	1
27	605-96		RH IDLER ASS'Y, S50 - 1 x 13T/S40 - 2 x 28T from TB-4012		1
28	605-62		LH IDLER ASS'Y, S50 - 1x 13T/S40 - 2 x 24T to TB-3904, all T	1	1
28	605.95		LH IDLER ASS'Y, S50 - 1 x 13T/S40 - 2 x 28T from TB-4012		1
29	605-92		RH IDLER ASS'Y, S50 - 2 x 13T/S40 - 2 x 24T to HTB-3970, all HT	1	1
29	605-94		RH IDLER ASS'Y, S50 - 2 x 13T/S40 - 2 x 28T from HTB-4022. KB-3972. K-5092	1	1
30	60591		LH IDLER ASS'Y, S50 - 2 x 13T/S40 - 2 x 24T lo HTB-3970, all HT	1	1
30	60593		LH IDLER ASS'Y, S50 - 2 x 13T/S40 - 2 x 28T from HTB-4022. KB-3972, K-5092	1	1
31	605-46		FRNT SPRKT ASS'Y, 1¼" S50 - 1 x 20T to T-3564, TB-1592	2	2
31	605-56		FRNT SPRKT ASS'Y, 1¼" S50 - 1 x 24T from T-3565, TB-1593	2	2
32	605-47		MID SPRKT ASS'Y, 1¼ S50 - 1 x 19/20T to T-3564, TB-1592	2	2
32	605-57		MID SPRKT ASS'Y, 1¼ S50 - 1 x 19/24T from T-3565, TB-1593	2	2
33	805-21		MID - REAR SPRKT ASS'Y, 1¼" S50 - 1 x 19/19T from TB-1593		2
34	605-48		REAR SPRKT ASS'Y, 1¼" S50 - 1 x 19T from T-3565, TB-1593	2	2
35	605-87		FRNT SPRKT ASS'Y, 1¼" S50 - 2 x 24T from HT-4153. HTB-3079, KB-3972, K-5092	2	2
36	605-88		MID SPRKT ASS'Y, 1¼" S50 - 2 x 19/24T from HT-4153, HTB-3079, KB-3972, K-5092	2	2
37	80523		MID REAR SPRKT ASS'Y. 1¼" S50 - 2 x 19/19 from HT-4153, HTB-3079, KB-3972	2	2
38	605-90		REAR SPRKT ASS'Y. 1¼" S50 - 2 x 19 from HT-4153. HTB-3079, KB-3972, K-5092	2	2
39	603-22		IDLER CHAIN-D, RC40 - 2 x 46P, Incl 59 to TB-3904, all T, HT	2	2
39	60324	RO	IDLER CHAIN-D. RC40 x 2 x 48P, Incl 59 from TB-4012, HTB-4022, KB-3972, K-5092	2	2
40	603-05	RO	FRNT CHAIN, RC50 - 1 x 42P, Incl 57 - to T-3564, TB-1592	2	2
40	803-05		FRNT CHAIN, RC50 - 1 x 44P, Incl 57 from T-3565, TB-1593	2	2
41	603-06		MID CHAIN, RC50 - 1 x 68P, Incl 57 to T-3564, TB-1592	2	2
41	803-06		MID CHAIN, RC50 - 1 x 70P, Incl 57 from T-3565, TB-1593	2	2
42	603-07		REAR CHAIN, RC50 - 1 x 96P, Incl 57	2	4
43	603-19		FRNT CHAIN, RC50 - 2 x 44P, Incl 58 from HT-4153, HTB-3079, KB-3972, K-5092	2	2
44	603-20		MID CHAIN, RC50 - 2 x 70P. Incl 58 from HT-4153, HTB-3079, KB-3972, K-5092	2	2
45	60321		REAR CHAIN, RC50 - 2 x 96P, Incl 58 from HT-4153, HTB-3079, KB-3972	2	4
46	117-35		WHEEL NUT, 7/16-20, fits 16, 17, 18	30	40
47	125.26		TIRE VALVE, see	6	8
48	125-15		RIM 4 X 7 x 5 BOLT, c/w Valve 47, see	6	8
49-1	100-76G		GOODYEAR TIRE, only 20", see key No. 51	6	8
49-2	100-76C		CARLISLE TIRE. only 21"	6	8
50	125-20G		LH TIRE - RIM ASS'Y, Gdyr. 5 bit Incl. 48,491.	3	4
51	125-21G		RH TIRE - RIM ASS'Y, Gdyr. 5 bit Incl. 48, 49-1.	3	4
52	603-04		SUB FLOOR PLYWOOD ½" all T, HT.	1	
53	803-04		SUB FLOOR PLYWOOD ½" all TB. HTB only.		1
54	125-68		WEIGHT BLOCK, 30 lbs. cast iron from K-5092 only	2	
55	103-81	RO	HHCS 7/16 - 20 x 2½	4	
56	117-32		NYLON LOCKNUT, 7/16-20	4	
57	100-14		CHAIN CONNECTING LINK, RC-50-1, use on #40, 41, 42	6	8
58	100-96		CHAIN CONNECTING LINK, RC-50-2, use on #38	6	6
59	100-97		CHAIN CONNECTING LINK, RC-40-2, use on #39	2	2
60	108-09	RO	WASHER, 1/2 x 1-3/8 x 1/8 , K	4	

19.0 Chain Take-up

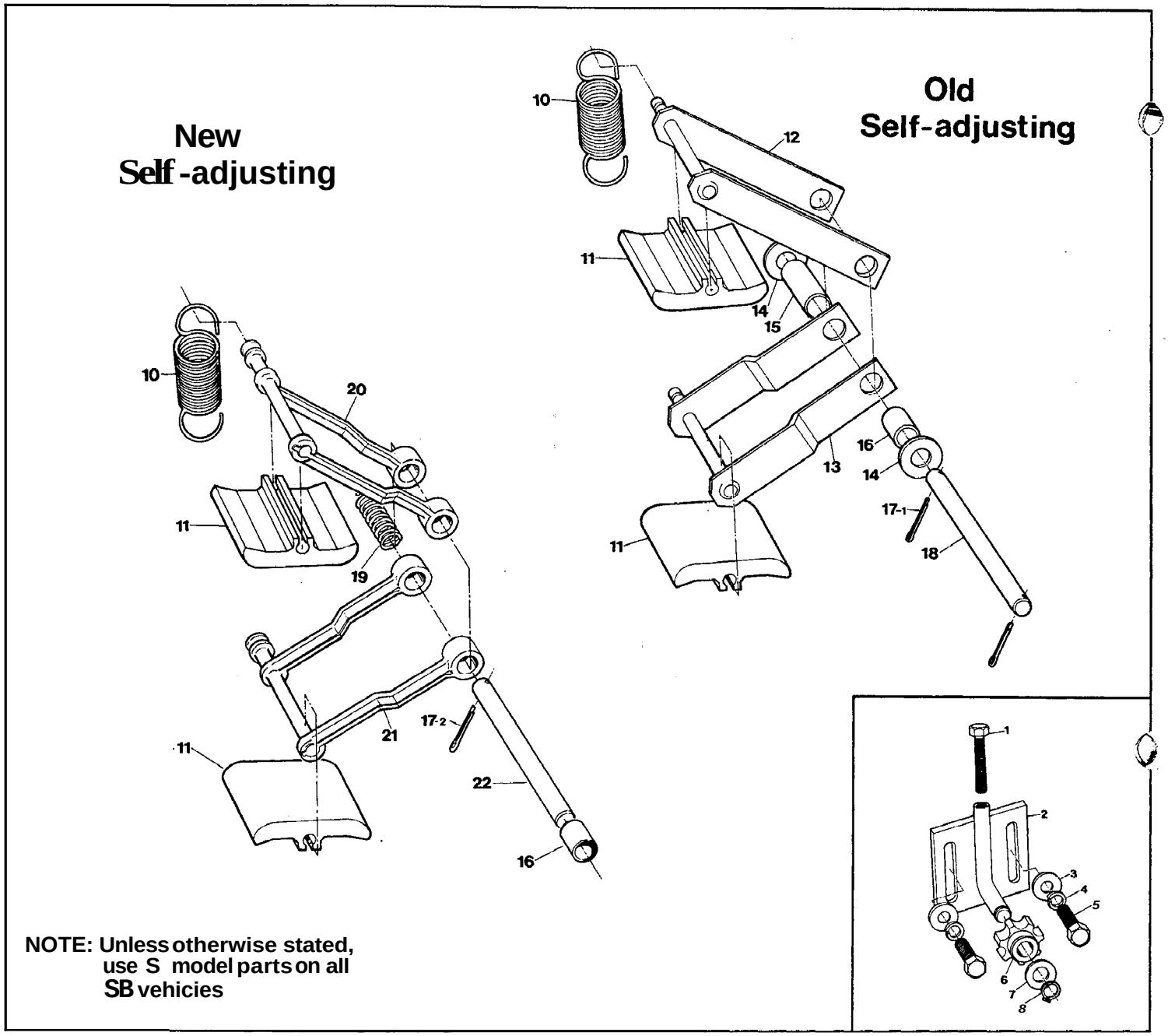

NOTE: Unless otherwise stated, use S model parts on all SB vehicles

19.0 Chain Take-up

Key N	Put No.	emark	Description	ty.
1	10532		HHCS, 5/16 18 x 1¾"	1
2	603-36		SUPPORT ASS'Y	1
3	108-15		SAE WASHER, ⅜"	2
4	108-06		LOCKWASHER, ⅜"	2
5	10517		HHCS, ⅜ - 16 x 1	2
6	60533		NYLON SPROCKET	1
7	108-35		SAE WASHER, ½"	1
8	107-05		RETAINING RING, .461" ID	1
	644		TENSIONER KIT, add on kit, Incl 1 to 8	
10	125-61		TENSIONER SPRING	1
11	603-61		SLIDER BLOCK, Nylon	2
12	603-62		CHAIN TENSIONER, Upper Arm Ass'y, from T-4585 to T-4985, TB-4012 to TB-5364, HT-4570 to HT-4908, HTB-4022 to HTB-5157. KB-3972 to KB-5384	1
13	603-63		CHAIN TENSIONER, Lower Arm Ass'y, from T-4585 to T-4985, TB4012 to TB-5364, HT-4570 to HT-4908, HTB-4022 to HTB-5157, KB-3972 to KB-5384	1

Key No.	Part No.	Remarks	Description	Qty
14	108-35		SAE WASHER, ½", as required	2
15	603-65		LONG SPACER, 1-5/16" lg.	1
16	603-66		SHORT SPACER, ⅝" lg.	1
17-1	100-01		COTTER PIN, 118 x 1", to T-4985. TB-5364, HT-4908, HTB-5157, KB-5384	2
17-2	100-01		COTTER PIN, 118 x 1", from T-4986, TB-5366, HT-4909, HTB-5377, K-5092, KB-5385, S-5759	1
18	603-64		PIVOT PIN, ½ x 6⅝"	1
19	125-78		SPACER SPRING	1
20	603-77		CHAIN TENSIONER, Upper Arm, from T-4986, TB-5366, HT-4909, HTB-5377, K-5092, KB-5385	1
21	60376		CHAIN TENSIONER, Lower Arm, from T-4986, TB-5366, HT-4909, HTB-5377, K-5092, KB-5385	
22	603-78		PIVOT PIN, ½ x 6⅜" lg, 1 hole	1
	647		TWO WAY CHAIN TAKE-UP KIT, Incl key Nos. 10, 11. 14. 16, 17-2, 19, 20, 21 & 22	

20.0 Electrical

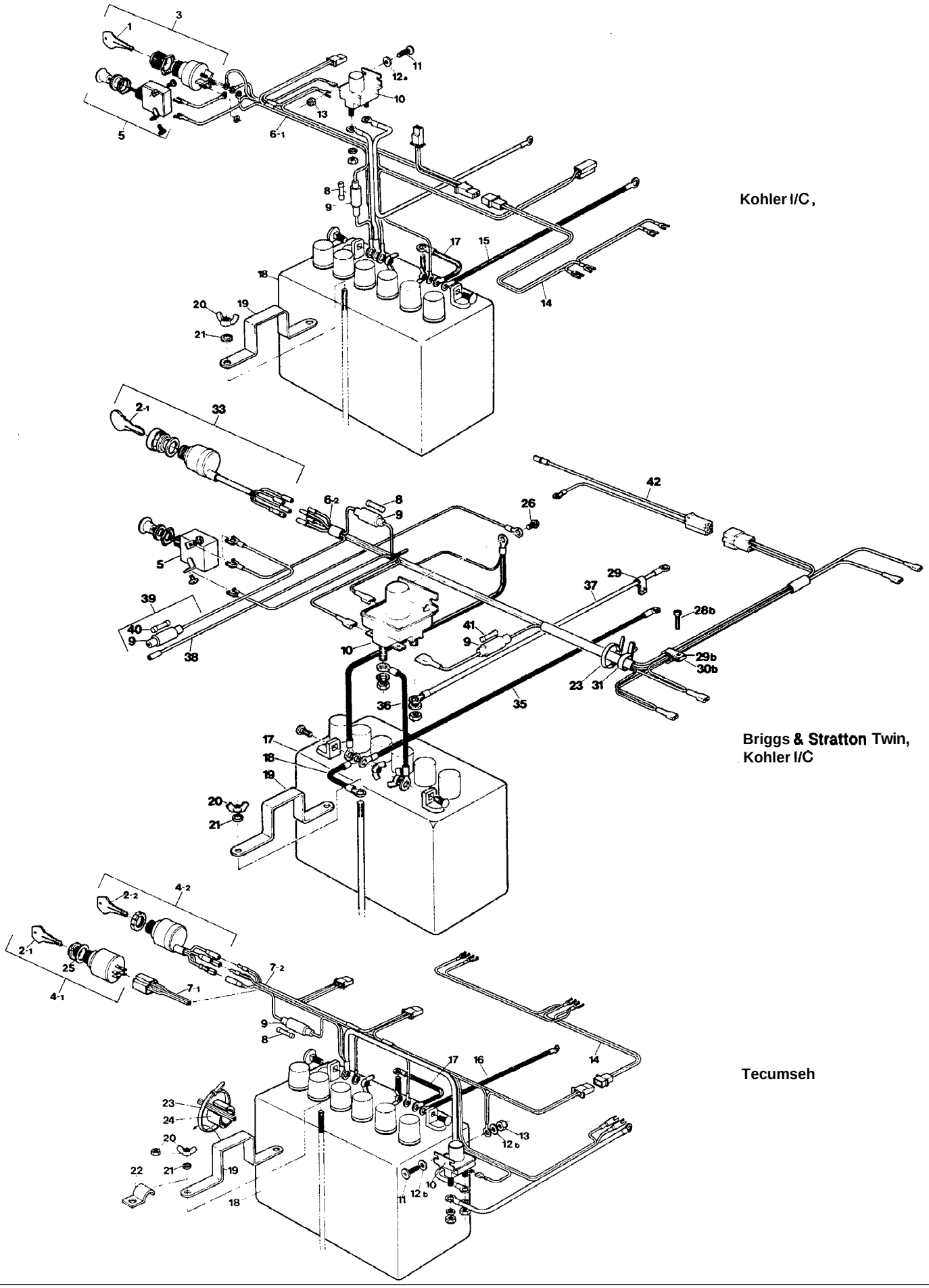

20.0 Electrical

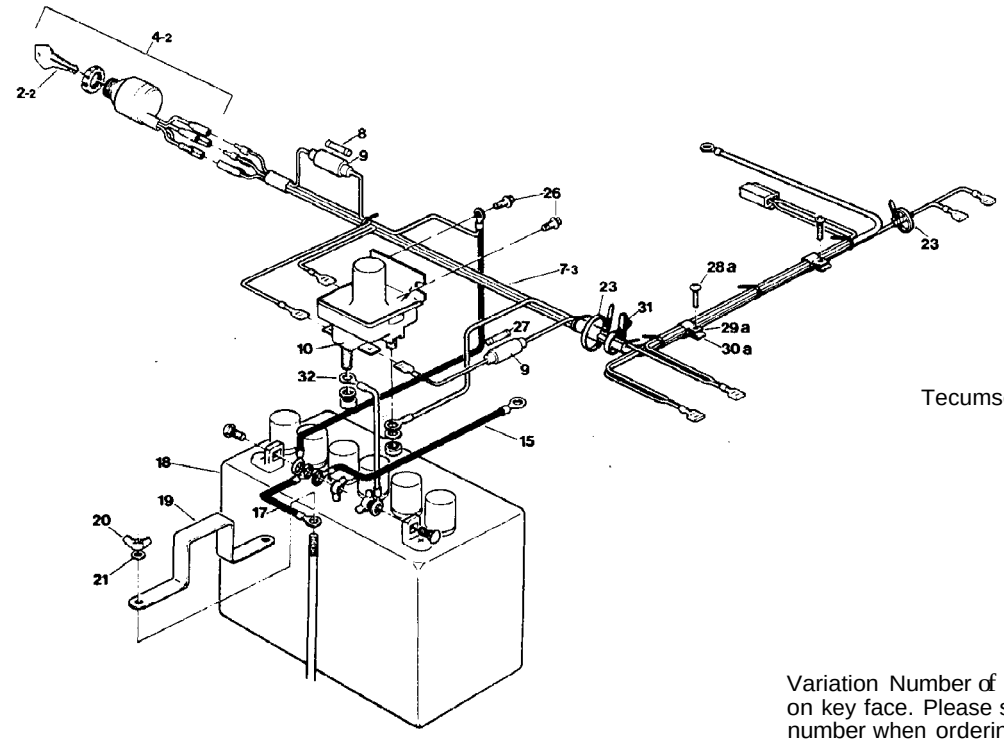

Tecumseh

Variation Number of key is stamped on key face. Please specify this number when ordering.

20.0 Electrical

Key No.	Part No.	Remarks	Description	Qty.
1	100-59-B		IGNITION KEY BLANK, (cut keys not available): used on No. 3 only.	1
2-1	10039-A		IGNITION KEY, used on No. 4-1, 33, specify Key variation #1, 2 or 3 when ordering	1
2-2	100.60-A		IGNITION KEY, used on No. 4-2, specify Key variation #10 or 11 when ordering	1
3	100-59		IGNITION SWITCH, from K-5092 to K-5668, from KB-3972 to KB-7146; see No. 1	1
4-1	100-39		IGNITION SWITCH, Incl No. 2-1, to T-4559 TB-3904, HT-4569, HTB-3970	1
4-2	100-60		IGNITION SWITCH, Incl No. 2-2, from T-4585, TB-4012. HT-4570, HTB-4022	1
5	100-62	RO	LIGHT SWITCH, from K-5092, KB-3972, S-5759	1
6-1	61316		MAIN WIRE HARNESS, Incl 8, 9 a 17, from K-5092 to K-5668, from KB-3972 to KB-7146	1
6-2	61325		MAIN WIRE HARNESS, Incl 8, 9 & 41. from K-5706, KB-7147, S-5759	1
7-1	613-13		MAIN WIRE HARNESS, TEC.. Incl Nos. 8 & 9, to T-4559, TB-3904, HT-4569, HTB-3970	1
7-2	61317		MAIN WIRE HARNESS, TEC., Incl Nos. 8, 9 & 17; from T-4585 to T-5472, TB-4012 to TB-6544, HT-4570 to HT-5289, HTB-4022 to 6632	1
7-3	613-23		MAIN WIRE HARNESS, TEC., Incl NOS. 8, 9 & 27: from T-5498, TB-6817, HTB-6736	1
8	12510		FUSE, 14 Amp.	1
9	61312	RO	FUSE HOLDER, see Nos. 6-1, 6-2, 7-1, 7-2, 7-3 & 39	
10	125-06		STARTER RELAY, to T.3731, TB-1960	1
10	100-36		STARTER RELAY, from T-3732, TB-1961. all HT HTB, K. KB and S	1
11	10325		PN HD SCREW, 10 24 x 3/4''	2
12a	120-05		Spacer. 3/16'	2
12b	120-05		Spacer, 3/16'	4
13	117-10		NYLON LOCKNUT, #10-24	1
14	613-01		HEAD LIGHT HARNESS, to T-5472 TB-6544, HT-5289, HTB-6632, K-5668, KB-7146	1
15	613-18		GROUND WIRE, 17". from T-5498, TB-6817, HTB-6736 from K-5092 to K 5668. KB-3972 to KB-7146	1
16	613-14		GROUND WIRE, 14" Black, to T-5472, TB-6544 HT-5289, HTB-6632	1
17	10035		BATTERY. small. #U1, *200* crank amps., to T-3753, TB-2034	1
17	10025		BATTERY, large, #22NF, 245 crank amps., from T-3754, TB-2035, K-5092, KB-3972. S-5759. all HT HTB & S models	1
18	61315		GROUND WIRE, 4-1/4'', all models, see NOS. 6-1 a 7-2	1
19	604-06		BATTERY RETAINING BRKT.. small; to T-3753, TB-2034	1
19	604-52		BATTERY RETAINING BRKT. large, from T-3754. TB-2035, K-5092, KB-3972. S-5759, all HT	1
20	117-03		HEX NUT, 5/16-18;	2
20	117-38		WING NUT, 5/16-18	2
20	117-18	RO	LOCKING WING NUT, 5/16-18	2
21	10805		LOCKWASHER, 5/16'	2
22	60510		CLAMP, 1/2''; to T-4569, TB.4011	1
23	10064		TIE RAP,	2
24	702-06		CUSHION, T-4585 to T-5463, TB-4012 to TB-6554, HT-4570 to HT-5289, HTB-4022 to HTB-6632	1
25	10836		SPEC. WASHER, W-152: to T-4559. TB-3904 HT-4569, HTB-3970	1
26	103-70		THREAD CUTTING SCREW, 1/4-20 x 1/2''	2
27	118-41		FUSE, 30 Amp.	1
28a	103-25		PN. HD. SCREW, #10-24 x 314"	2
28b	103-25		PN. HD. SCREW, #10-24 x 314"	3
29a	125-48		CLIP, 112" ID.	2
29b	125-48		CLIP, 1/2'' ID.	3
30a	117-50		SPRING NUT, #10-24	2
30b	117-50		SPRING NUT, #10-24	3
31	12812		WIRING STRAP, plastic	1
32	61522		POSITIVE WIRE, 9'', from T-5498. TB-6817. HTB-6736	1
33	126-17		IGNITION SWITCH, Incl No. 2-1; Key variation #1, from K.5706. KB-7147, S-5759	1
35	61328		ENGINE GROUND CABLE, from K-5706, KB-7147	1
36	613-26		MAIN POWER CABLE, from K-5706. KB-7147. S-5759	1
37	613-27		ENGINE POWER CABLE, from K-5706, KB-7147, S.5759, 24" long	1
38	613-30		BLOWER FAN GROUND LEAD, from K-5706, KB-7141	1
39	613-29		BLOWER FAN POWER LEAD, from K-5706, KB-7147 Incl NO. 9 & 40	1
40	118-37		FUSE, 9 Amp: see No. 39	
41	118-42		FUSE, 35 Amp. from K-5706, KB-7147. S-5759	
42	613-31		HARNESS ADAPTER, from S-5759	1